Fiat Auto

Fiat Panda 4x4

Service Manual

FIAT

		Page
	PREFACE	4
	FOREWORD	5
00.0	INTRODUCTION	6
	– Dimensions – Weights	7
	– Identification data and location on vehicle	8
	– Performance – Fuel consumption	9
	– Capacities	10
	– Characteristics of lubricants	11
	TECHNICAL DATA	
00.10	ENGINE	12
	– Characteristic curves	13
	– Crankcase and crankgear components	14
	– Cylinder head and timing system components	18
	– Lubrication	22
	– Cooling system – Fuel system	23
00.18	CLUTCH	25
00.21-27	GEARBOX – FRONT DIFFERENTIAL	26
00.24	PROPELLER SHAFT	28
00.27	AXLE – REAR DIFFERENTIAL UNIT	29
00.33	BRAKING SYSTEM	31
00.41	STEERING	32
00.44	WHEELS	33
00.44	FRONT SUSPENSION	34
00.44	REAR SUSPENSION	35
00.55	ELECTRICAL EQUIPMENT	36
	– Starting	37
	– Recharging	39
	– Ignition	40
10.	ENGINE	
	FUEL SYSTEM	41
	– Weber 32 DATR 10/100 carburettor	41
	· Accelerator pump	41
	· Float level	42
	· Semi-automatic choke	42
	· Thermostatic casing	44
	· Fast idle	45
	· Idle adjustment on the vehicle	46
21–27	GEARBOX – FRONT DIFFERENTIAL	
	REMOVING–REFITTING	47
	DISMANTLING AT THE BENCH	52
	DIFFERENTIAL UNIT AND REDUCTION GEAR	56
	– Removing differential	56
	– Refitting differential	57
	– Bevel pinion	59
	– Fitting and adjusting differential unit	62
	– Fitting gearbox	66
	– Rear transmission clutch	66
24.	PROPELLER SHAFT	
	REMOVING–REFITTING	69
	UNIVERSAL JOINTS AND FLEXIBLE MOUNTINGS	70
	– Removing	70
	– Refitting	71
	SLIDING SLEEVE AND CONSTANT VELOCITY JOINTS	73
	– Removing constant velocity joints	73
	– Refitting constant velocity joints	75
	– Checking shaft alignment	75
27.	AXLE AND REAR DIFFERENTIAL UNIT	
	REMOVING–REFITTING	77
	WHEEL HUBS – DRIVE SHAFTS	79
	– Removing-refitting	79
	DIFFERENTIAL UNIT	81
	– Removing from rear axle	81
	– Removing – checks – fitting	82
	BEVEL PINION	84
	– Removing	84
	– Bearing outer tracks	85
	– Adjusting	86
	– Fitting	88
	– Adjusting	89
33.	BRAKING SYSTEM	91
	PERIODIC REPLACEMENT OF BRAKE FLUID	91
55.	ELECTRICAL EQUIPMENT	92
	FUSES	92
	WIRING DIAGRAMS	93
70.	BODYWORK	
	– Diagram for checking attachment points of mechanical components to bodyshell	99
	SPECIAL TOOLS	101
	TIGHTENING TORQUES	103
	GRAPHIC REPRESENTATIONS AND SYMBOLS	110

This publication has been divided into sections headed by two figure numbers which appear in the spares catalogue and in the repair time schedule.

The section titled **INTRODUCTION and TECHNICAL DATA (00.)** has a dual purpose of introducing the model and reinforcing the remaining part of the manual dealing with the repair operations.

It has therefore been subdivided into:

- **INTRODUCTION (00.0)** which chontains all the special features of the new model;
- **TECHNICAL DATA (00.10 - 00.18 etc)** which includes all the data and information concerning the remaining part of the manual dealing with servicing operations.

The remaining sections (10 - 21 - 27 - 24 etc) include descriptions of the servicing operations.

This publication contains graphic representations and symbols in place of descriptions for mechanical components, operations and servicing techniques.
The use of colour for a component or part of one serves to draw the operator's attention to the object to be measured or checked.

Example:

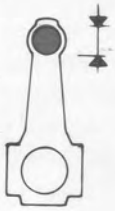

Small end diameter

Tighten to torque

This manual contains the main data necessary for servicing the FIAT PANDA 4 x 4 which differs from that for the PANDA 45 contained in the publication FIAT PANDA print no. 503.884.

Foreword

The **Fiat Panda 4 x 4** is a two box, three door car with the engine mounted at the front, with front wheel drive or the option of four wheel drive.
This latter feature, together with other modifications to the mechanics and bodywork (compared with the **Panda 45**) make this car very versatile and suitable for use off the road.
The 965 cc engine has a power output of 35.3 kW (42 CV).
The Fiat Panda 4 x 4 is only available in one trim level with many features.

00.0

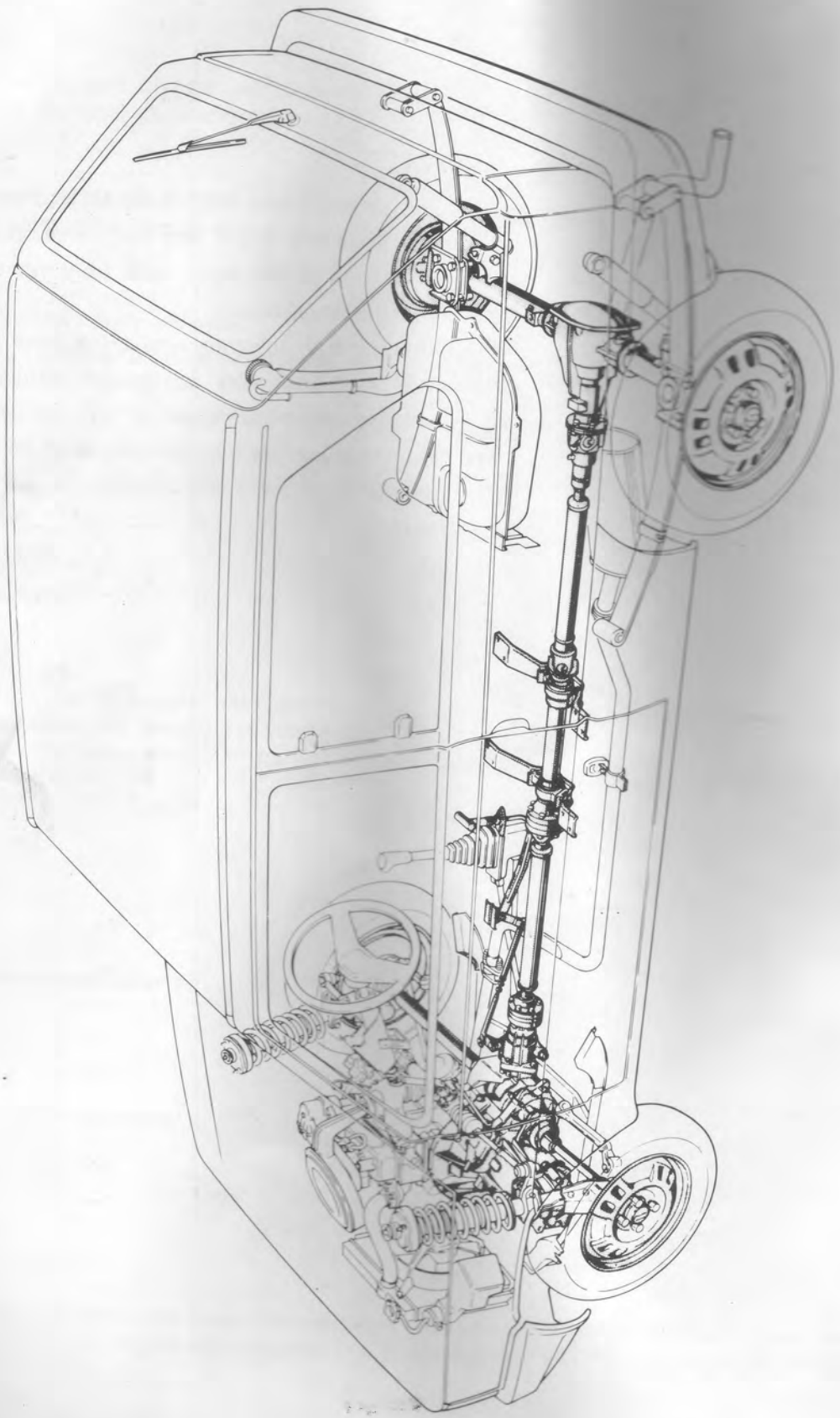

DIMENSIONS

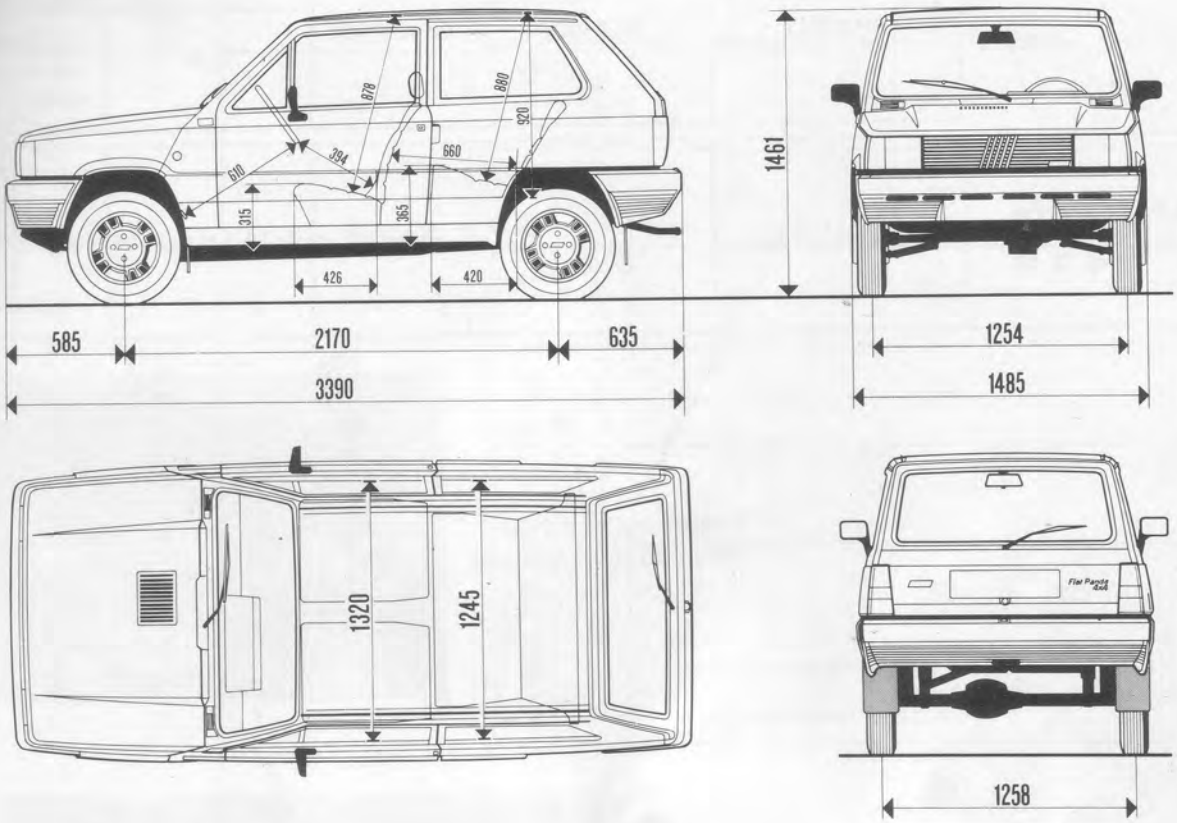

The height refers to an unladen car.

Luggage compartment capacity at height of side windows:

- with rear seat in normal position 272 litres (9.6 cu ft)
- with rear seat folded down 632 litres (22.32 cu ft)

WEIGHTS (in kg)

Kerb weight	740
+ 400 (50 / 330)	1140
+ 50	543
	597
+ 330	495
	645
	800

Introduction
Location of identification data on vehicle
00.0

	CHASSIS	VERSION	GEARBOX	ENGINE		
				Type	Petrol	
					super	norm.
Fiat Panda 4 x 4	ZFA 141 A.00	141 A4 3 door	5 speed	A 112 B1.054	✱	–

Engine no. and type
Stamped on crankcase

Vehicle type identification code
and chassis manufacture no.

V.I.N. Plate
(EEC regulations)

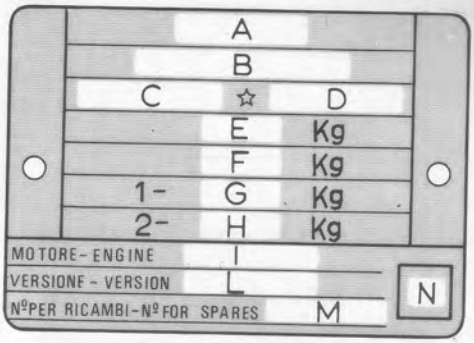

A Name of manufacturer
B Homologation number
C Vehicle type identification code
D Chassis manufacture number
E Maximum authorised weight of vehicle fully laden
F Maximum authorised weight of vehicle fully laden plus tow
G Maximum authorised weight on first axle (front)
H Maximum authorised weight on second axle (rear)
I Engine type
L Bodywork version code
M Spares number
N Space reserved for diesel vehicles (correct value of smoke absorption coefficient)

	GEARBOX	1 3 5 / 2 4 R	
Speed km/h (mph)	1	28	
	2	53	
	3	81	
	4	114	
	5	~ 135	
	R	30	
Maximum climable gradient %	(*) 1	with four wheel drive	42
		with front wheel drive	35
	2	19	
	3	11,6	
	4	7	
	5	5	
	R	with four wheel drive	38
		with front wheel drive	35
Fuel consumption (EEC figures) (litres/100 km) (mpg)	Urban cycle (A)	7,9	
	Constant speed 90 km/h (56 mph) (B)	5,9	
	Constant speed 120 km/h (75 mph) (C)	7,9	
	Average consumption (CCMC proposal) $\frac{A + B + C}{3}$	7,2	

(*) With 2 persons + 20 kg luggage and four wheel drive: from standstill 50%
maximum 60%

00.0

Description	Unit		Quantity dm³ (lt)	Quantity (kg)
O.R. (98-100)			35	–
50% + Paraflu FIAT 11	Total capacity of cooling system		5,2	–
	Total capacity		4,1	3,65
	Partial capacity (periodic replacement)		3,80	3,40
a = ZC 90		a	2,40	2,20
b = GI/A		b	–	–
W 140/M-DA	a	a	–	1,20
	b Self-locking	b	–	–
a e b GI/A	a	a	–	–
	b	b	–	–
c = W 90/M-DA	c	c	–	–
d = K 854	d	d	–	0,08 ÷ 0,10
DOT 3	Total capacity		0,39	–
+ DP1	3%		3,5	–
	~ – 10°C	50%		
	~ – 20°C	100%		

Name of product	Description International designation	Usage
VS+ Superstagionale SAE 40	Low ash content detergent oil for petrol engines. Service API "SE". Satisfies standard MIL-L-46152. Exceeds European CCMC specifications.	Min temp above 0° C max above 35° C
VS+ Superstagionale SAE 30	Low ash content detergent oil for petrol engines. Service API "SE". Satisfies standard MIL-L-46152. Exceeds European CCMC specifications.	Min temp above 0° C max below 35° C
VS+ Superstagionale SAE 20 W	Low ash content detergent oil for petrol engines. Service API "SE". Satisfies standard MIL-L-46152. Exceeds European CCMC specifications.	Min temp between – 15° C and 0° C
VS+ Superstagionale SAE 10 W	Low ash content detergent oil for petrol engines. Service API "SE". Satisfies standard MIL-L-46152. Exceeds European CCMC specifications.	Min temp below – 15° C
VS+ Supermultigrado SAE 15 W/40	Low ash content detergent oil for petrol engines. Service API "SE". Satisfies standard MIL-L-46152. Exceeds European CCMC specifications.	Min temp above – 15° C Max temp above 35° C
TUTELA W 140/M-DA	SAE 80 W 90 EP oil, specially for normal and self-locking differentials. Satisfies specification MIL-L-2105 C.	Hypoid differentials Self-locking differentials Steering boxes
TUTELA ZC 90	Non E.P. SAE 80 W 90 oil for gearboxes, containing anti-wear additives.	Non hypoid gearboxes and differentials
TUTELA GI/A	Dexron II oil for automatic transmissions.	Automatic gearboxes power assisted steering
TUTELA JOTA 1	Lithium soap based grease N.L.G.I. N. 1 consistency.	Greasing vehicle except for components particularly exposed to water requiring special greases
TUTELA MRM2	Lithium soap based molybdenum disulphide water repellant grease, N.L.G.I. 2 consistency.	Universal joints
TUTELA MR2	Lithium soap based grease N.L.G.I. N. 2 consistency.	Universal joint bearings
TUTELA MR3	Lithium soap based grease N.L.G.I. N. 3 consistency.	
TUTELA DOT3	Hydraulic brake fluid DOT 3, meeting F.M.V.S.S. standard no. 116.	Hydraulic brakes and hydraulically operated clutch
K 854	Lithium soap based grease N.L.G.I.000, consistency containing molybdenum disulphide.	Rack and pinion steering boxes
SP 349	Special castor oil and sodium soap based grease containing graphite and molybdenum disulphide; compatible with brake fluid and brake circuit rubber seals.	Load proportioning valve Load proportioning valve bush Rod and bar control
Liquid DP 1	Alcohol based liquid detergent.	To be used undiluted or diluted for windscreen washers and headlamp washers
Liquid Paraflu11 FIAT	Mono ethylene glycol based anti-freeze for cooling systems.	Cooling circuit percentage to be used 35 % up to – 25° C 50 % up to – 35° C

CHARACTERISTICS

Cycle		OTTO 4 stroke
No. of cylinders		4
Cylinder liner (bore)	mm	67,2
Stroke	mm	68
Piston displacement	cm^3	965
Compression ratio		9,2
Max power DIN	kW (CV)	35,3 (48)
	1/min	5600
Max torque DIN	daNm (kgm)	7 (7,1)
	1/min	3500

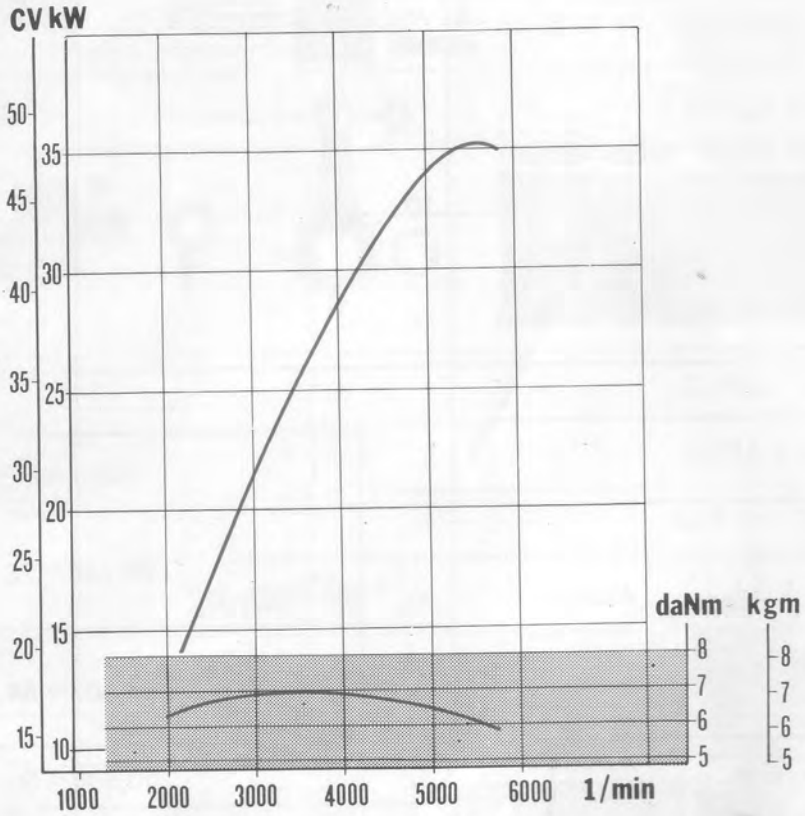

Characteristic engine curves, from DIN method.

The power curve shown can be obtained with the engine overhauled and run in with a fan, silencer and air filter at sea level.

TEST BENCH TEST CYCLE WITH OVERHAULED ENGINE

This test is carried out to check that the engine is running smoothly, in order to carry out any necessary adjustments and to check for leaks of oil, coolant liquid or fuel.

Test speed rpm	Time in minutes	Load on the brakes
800 ÷ 1000	10′	No load
1500	10′	No load
2000	10′	No load

NOTE *In the bench test of the overhauled engine it is not advisable to run the engine at maximum speed but to stick to the figures given in the table; complete the running in of the actual engine in the car.*

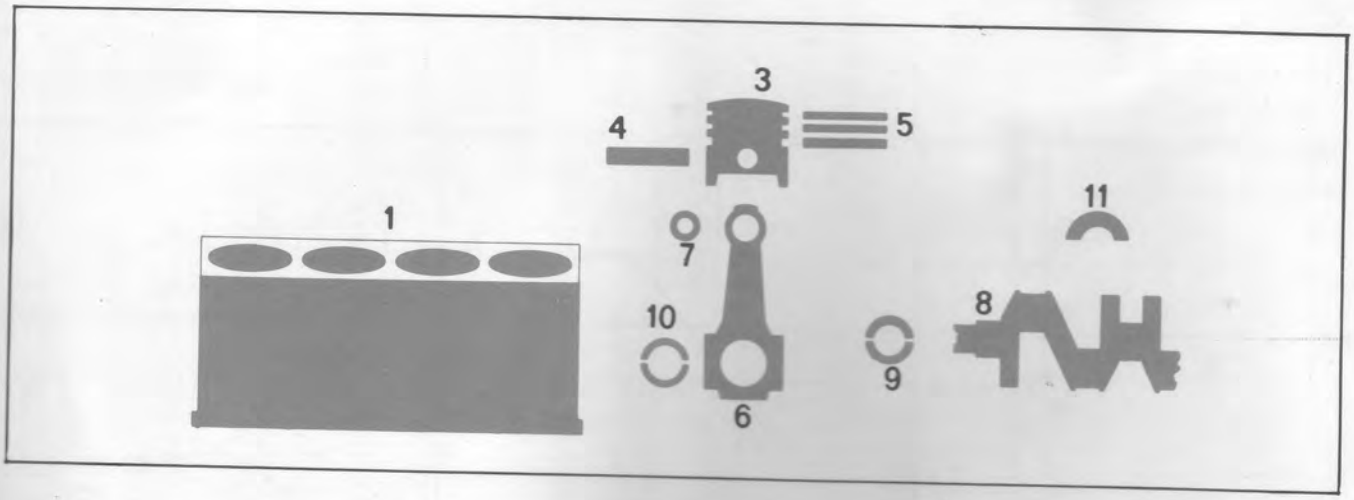

DESCRIPTION		Values in mm
1 Main bearings	L	23,240 ÷ 23,300
	Ø	54,507 ÷ 54,520
Camshaft bearing or bush housings	B	50,505 ÷ 50,515
	C	50,515 ÷ 50,525
	D	50,705 ÷ 50,715
	E	50,715 ÷ 50,725
	$Ø_2$	46,420 ÷ 46,450
	$Ø_1$	35,921 ÷ 35,951
Tappet housings	Ø	14,010 ÷ 14,028
Cylinder liner	Ø (0,010)	67,200 ÷ 67,250
3	X	41,25
	A	67,140 ÷ 67,150
	C	67,160 ÷ 67,170
	E	67,180 ÷ 67,190
	Ø FIAT >	0,2 - 0,4 - 0,6

DESCRIPTION		Values in mm
3	Difference in weight between pistons	± 2,5 g
3-1	Piston-Cylinder liner	0,050 ÷ 0,070
3 Gudgeon pin housing	1	19,982 ÷ 19,986
	2	19,986 ÷ 19,990
	3	19,990 ÷ 19,994
4 Gudgeon pin	1	19,970 ÷ 19,974
	2	19,974 ÷ 19,978
	3	19,978 ÷ 19,982
	Ø FIAT >	0,2
4-3	Gudgeon pin-Housing	0,008 ÷ 0,016
3 Piston ring grooves	1	1,530 ÷ 1,550
	2	1,770 ÷ 1,790
	3	3,967 ÷ 3,987
5 Piston rings	1	1,478 ÷ 1,490
	2	1,728 ÷ 1,740
	3	3,925 ÷ 3,937
	Ø FIAT >	0,2 - 0,4 - 0,6
5-1 Opening at end of rings in cylinder liner	1	0,25 ÷ 0,40
	2	0,25 ÷ 0,40
	3	0,20 ÷ 0,35
5-3 Piston rings-Grooves	1	0,040 ÷ 0,072
	2	0,030 ÷ 0,082
	3	0,020 ÷ 0,052

00.10

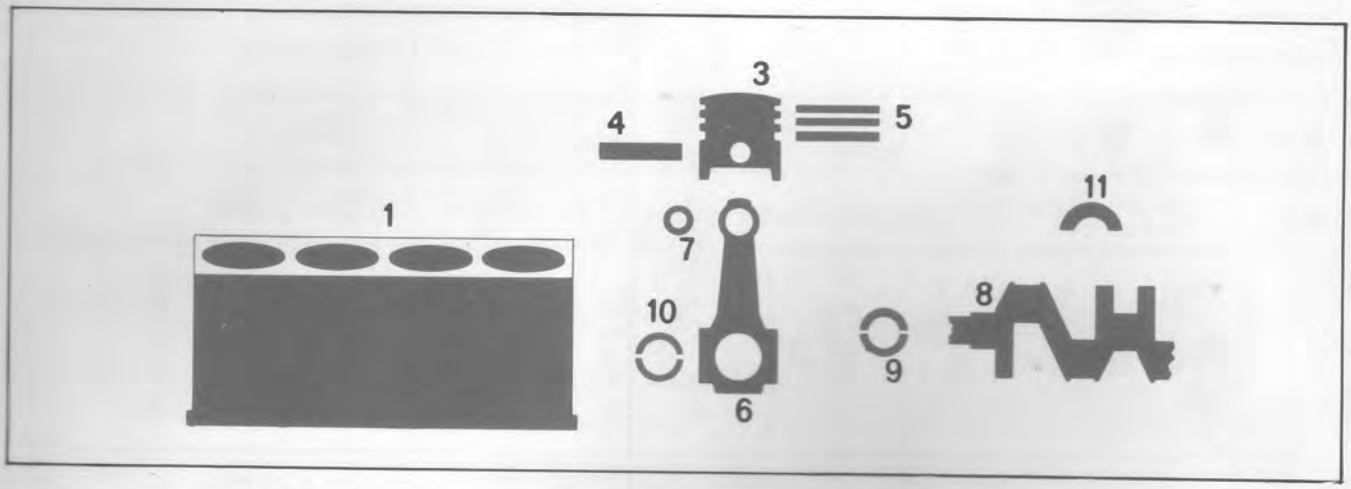

DESCRIPTION			Values in mm
6	Small end bush or pin housing	$\varnothing_1$	19,940 ÷ 19,960
	Big end bearing housing	$\varnothing_2$	43,657 ÷ 43,673
4-6	Gudgeon pin-Small end		0,010 ÷ 0,042
8	Main journals $\varnothing_1$	1	50,795 ÷ 50,805
		2	50,785 ÷ 50,795
	Crankpins	$\varnothing_2$	39,985 ÷ 40,005
		L	28,080 ÷ 28,120
9	Crankshaft bearings L	1	1,832 ÷ 1,838
		2	1,837 ÷ 1,843
	Ø FIAT <		0,254 - 0,508 - 0,762 - 1,016
9-8	Crankshaft bearings-Pins		0,026 ÷ 0,061
10	Big end bearings	L	1,807 ÷ 1,813
	Ø FIAT <		0,254 - 0,508 - 0,762 - 1,016
10-8	Big end bearings - Pins		0,026 ÷ 0,074

DESCRIPTION		Values in mm
Thrust washers 11	s	2,310 ÷ 2,360
	s FIAT >	0,127
11–8	Thrust washers-Crankshaft	0,060 ÷ 0,260

Diagram showing connecting rod and piston assembly and direction of rotation in engine

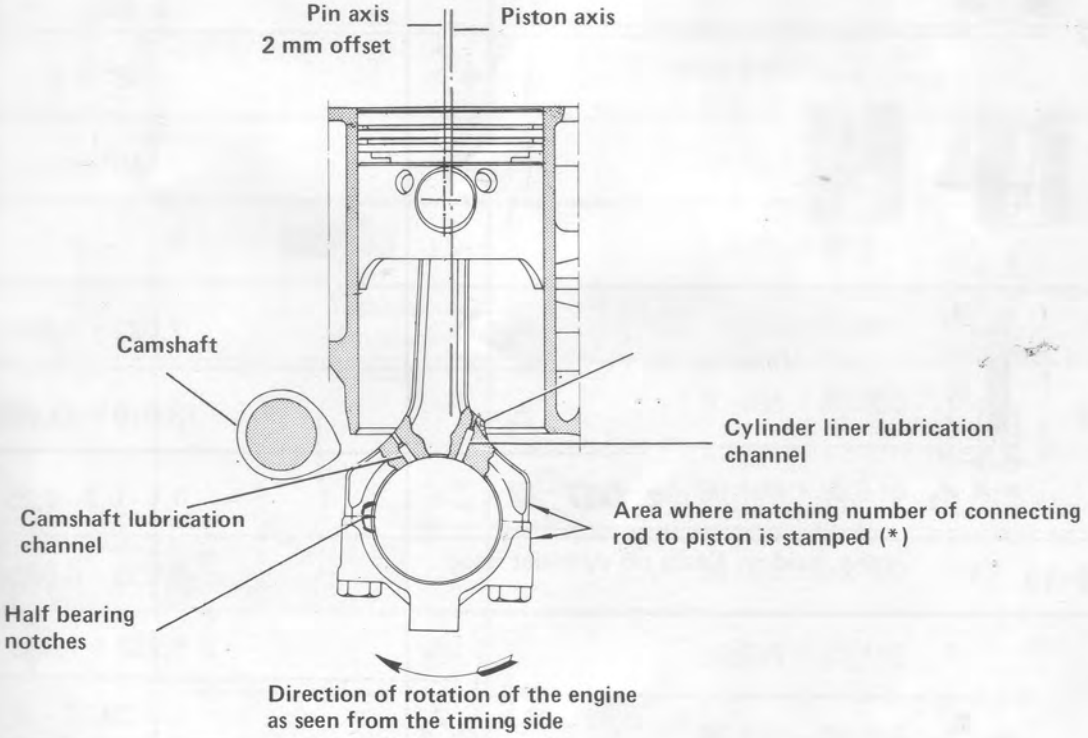

(*) If the connecting rod is replaced by one which is not numbered, stamp the matching number in the area opposite the half bearing retainer notches.

00.10

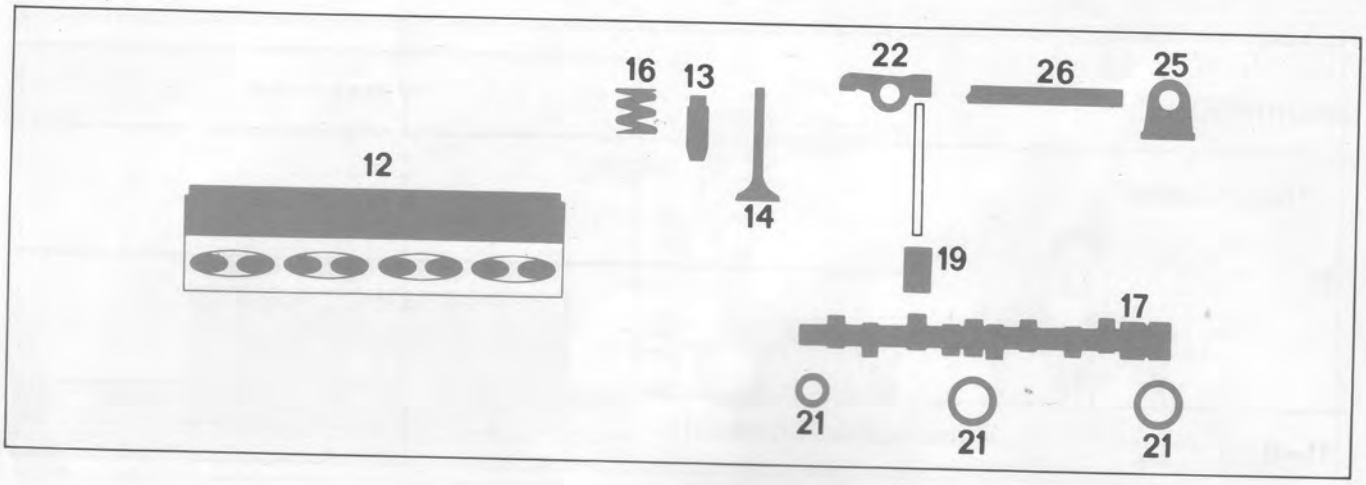

DESCRIPTION		Values in mm
12	Valve guide seats on cylinder head ⌀	12,950 ÷ 12,977
	Valve seats α	45° ± 5′
	α	45° ± 5′
	L	~ 2
13	Valve guides ⌀1	7,022 ÷ 7,040
	⌀2	13,010 ÷ 13,030
	⌀1 FIAT >	0,1 - 0,2 - 0,25
12-13	Valve guides - Seats on cylinder head	0,033 ÷ 0,080
14	Valves ⌀1	6,982 ÷ 7,000
	⌀2	29,10
	α	45° 30′ ± 5′
	⌀1	6,982 ÷ 7,000
	⌀2	26,1
	α	45° 30′ ± 5′
13-14	Valves - Valve guides	0,022 ÷ 0,058

DESCRIPTION		Values in mm
16 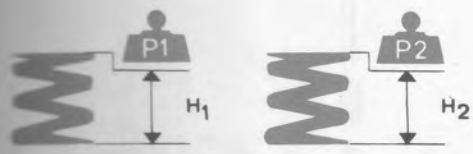 Valve springs	P_1	24,8 ÷ 28,2 daN (25,3 ÷ 28,7 kg)
	H_1	36,5
	P_2	53,1 ÷ 58,6 daN (54,2 ÷ 59,8 kg)
	H_2	28,1
17 Camshaft bearings 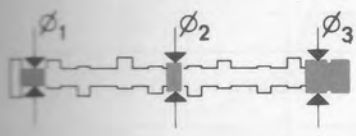	$Ø_1$	30,975 ÷ 31,000
	$Ø_2$	43,348 ÷ 43,373
	$Ø_3$	37,975 ÷ 38,000
		5,6
		5,6
19 Tappets 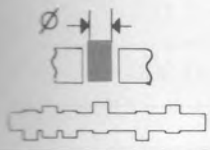 Ø FIAT >	Ø	13,982 ÷ 14,000
		0,05 – 0,10
19–1	Tappets Housings	0,010 ÷ 0,046
Camshaft bushes 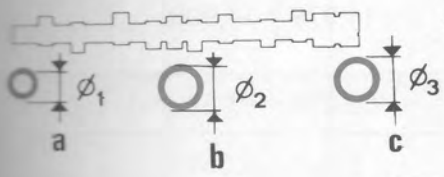 Ø3	B	50,485 ÷ 50,500
	C	50,495 ÷ 50,510
	D	50,685 ÷ 50,700
	E	50,695 ÷ 50,710
21 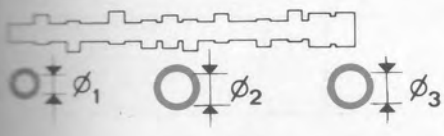	$Ø_1$	36,030 ÷ 36,068
	$Ø_2$	46,533 ÷ 46,571
	$Ø_1$	31,026 ÷ 31,046
	$Ø_2$	43,404 ÷ 43,424
Ø1 Ø2 FIAT	$Ø_3$	38,025 ÷ 38,050

00.10

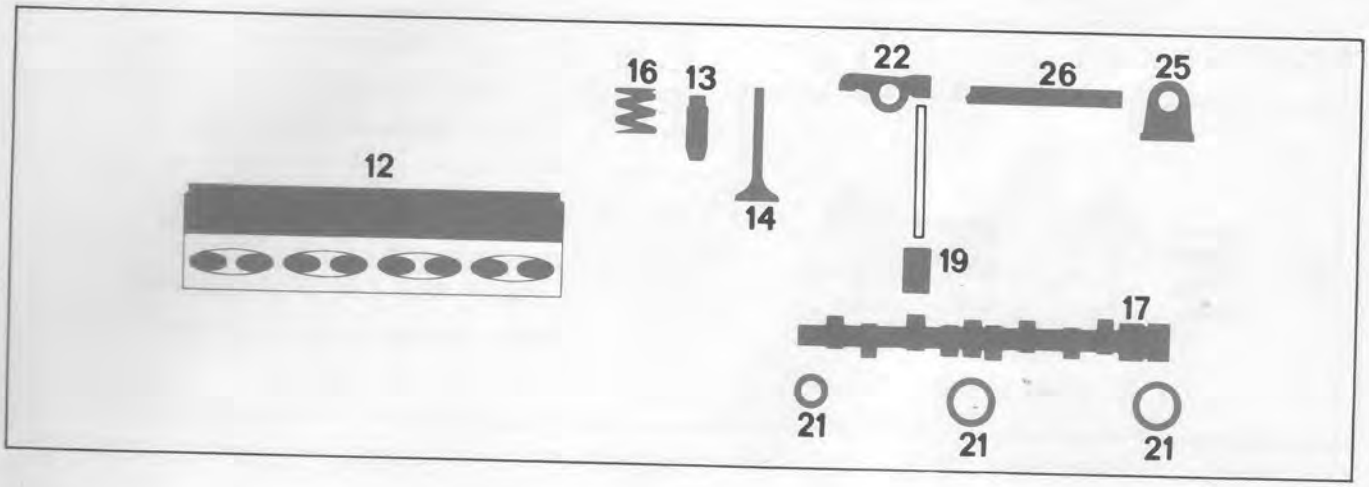

DESCRIPTION		Values in mm
17-21a	Camshaft bearings - Bushes	0,026 ÷ 0,071
17-21b		0,031 ÷ 0,076
17-21c		0,025 ÷ 0,075
21a-1	Camshaft bushes - Crankcase	0,079 ÷ 0,147
21b-1		0,083 ÷ 0,151
21c-1		0,005 ÷ 0,030
22	Rocker arms ø	15,010 ÷ 15,030
25	Rocker arm supports ø	15,010 ÷ 15,028
26	Rocker shaft ø	14,978 ÷ 14,990
26-22	Rocker shaft Rocker arms	0,020 ÷ 0,052
26-25	Rocker shaft Rocker arm supports	0,020 ÷ 0,050
17-14	to check timing	0,60
		0,60
	operation	0,15
		0,20

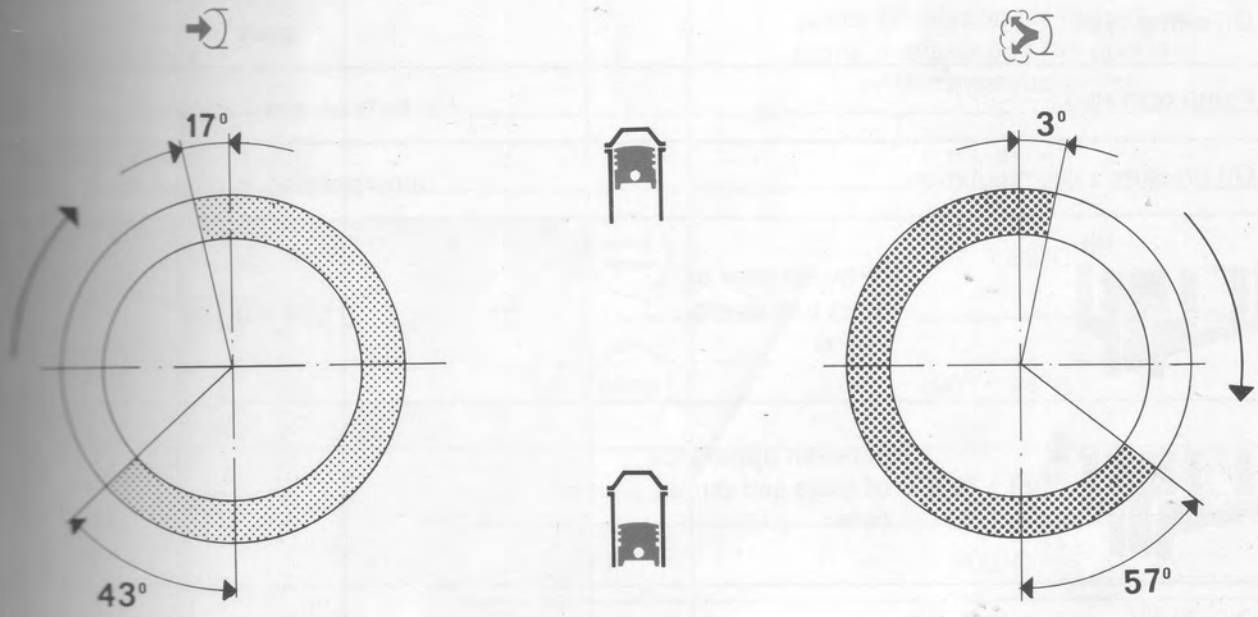
17°
43°
3°
57°

00.10

DESCRIPTION	Values in mm
Oil pump type	gears
Pump operated	through auxiliary shaft
Oil pressure valve regulation	incorporated in oil pump
between edge of gears and pump casing	0,050 ÷ 0,140
between upper side of gears and pump cover	0,020 ÷ 0,105
$\varnothing_1$ $\varnothing_2$ $\varnothing_1 - \varnothing_2$	0,010 ÷ 0,050
$\varnothing_1$ $\varnothing_2$ $\varnothing_1 - \varnothing_2$	0,013 ÷ 0,050
between drive and driven gears	0,08
Total capacity filter	cartridge
Insufficient oil pressure sender unit	electrical
bar 100°C Operating pressure at temperature of 100° C	2,94 ÷ 3,92 bar (3 ÷ 4 kg/cm²)
P1 H_1 — H_1	29
P_1	4,28 ÷ 4,54 daN (4,37 ÷ 4,63 kg)

COOLING SYSTEM

Cooling circuit		water circulation via centrifugal pump, radiator and fan operated by thermostatic switch
Water pump operation		through belt
Thermal switch to engage fan		85° ÷ 89°C
	stop	90° ÷ 94°C
Engine cooling water thermostat	opening	85° ÷ 89°C
	max opening	100°C
	valve travel	⩾ 7,5 mm
Clearance between impeller blades and pump casing		0,8 ÷ 1,2 mm
Pressure for checking cooling circuit water tightness		~ 0,98 bar (1 kg/cm²)
Pressure for checking calibration of spring loaded overflow valve for radiator cap		0,78 bar (0,8 kg/cm²)

FUEL SYSTEM

Fuel pump	mechanical, diaphragm type
Flow rate capacity	75 litres/hour
bar a 4000/min Pressure at 4000 rpm of the crankshaft	0,176 bar (0,18 kg/cm²)

CARBURETTOR – Calibration data			WEBER 32 DATR 10/100	
			1st barrel	2nd barrel
Venturi		mm	22	22
Auxiliary Venturi		mm	4	4
Main jet		mm	1,05	1,05
Air bleed jet		mm	1,75	1,50
Emulsion tube		type	F27	F30
Idle jet		mm	0,47	0,70
Air idle jet		mm	1,00	0,70
Pump jet		mm	0,40	–
Superfeed jet		mm	—	0,95
Superfeed air jet		mm	—	1,00
Superfeed mixture jet		mm	—	2,00
Needle valve		mm	1,50	
Anti-siphoning device		mm	1,00	–
Idle mixture adjustment hole		mm	1,50	–
1st progression hole		mm	1,00	1,00
2nd progression hole		mm	0,90	1,00
3rd progression hole		mm	0,80	–
Pump capacity (for 10 strokes)		cc	7 ÷ 11	
Float level		mm	7 ± 0,25	
Float travel		mm	42,5 ÷ 43,5	
Choke	Butterfly opening with choke out (fast idle)	mm	0,80 ÷ 0,85	—
Choke	Fast idle cam timing	mm	7 ÷ 7,5	—
Choke	Clearance between choke control lever and stem	mm	0,3 ÷ 1	—
Choke	Automatic anti-flooding device min	mm	4,25 ÷ 4,75	—
Choke	Automatic anti-flooding device max	mm	8 ÷ 8,5	–
Fast idle butterfly opening (modulated by delay valve)		mm	0,4 ÷ 0,5	—

		Values in mm
		170 CP 295
Type		dry, single plate
Operating mechanism		diaphragm spring
Spring loading		295 daN (300 kg)
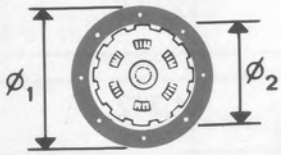 Lining	$\varnothing_1$	170
	$\varnothing_2$	120
Clutch pedal setting		about 15 mm below brake pedal
Diaphragm spring release travel		8
Maximum allowable movement following wear of driven disc lining		5
Clutch release		mechanical

00.21-27

GEARBOX

Synchronizers	spring ring (Porsche type)	3 5 4
	baulk ring type	1 2
Gears	straight toothed	R
	helical toothed	1 3 5 2 4
Gear ratios	1	3,909
	2	2,055
	3	1,342
	4	0,964
	5	0,723
	R	3,615

DIFFERENTIAL - REDUCTION GEAR

Final drive gears ratio		60/11 (5,454)
Ratio on the wheels	1	21,322
	2	11,212
	3	7,320
	4	5,526
	5	3,944
	R	19,740

Crown wheel and pinion reduction ratio	14/41 (0,341)
Crown wheel and pinion reduction bearing rolling torque	0,08 ÷ 0,12 daNm (0,081 ÷ 0,122 kgm)
Adjustment of conical pinion position	by shims
Thickness of shims FIAT (0,05) mm	2,55 ÷ 3,35
Planet/satellite gears rolling torque	1 ÷ 4 daNm (1,02 ÷ 4,08 kgm)
Adjustment of planet/satellite gears rolling torque	by shims
Thickness of shims FIAT (0,05) mm	0,85 ÷ 1,15
Differential internal box bearings	conical roller bearings
Bearings not loaded	0,12
Interference to obtain exact bearing pre-loading — Bearings loaded (350 daN) mm	0,08

Clearance between reduction gear pinion and crown wheel — mm	0,08 ÷ 0,15
Adjustment of clearance between reduction gear pinion and crown wheel	by shims
Adjustment of bearing pre-loading	
Thickness of shims for pre-loading and adjusting differential internal box bearing clearance — 0,10 mm	0,40 ÷ 1,00

PROPELLER SHAFT

Type	in 3 sections
Supports	2 with sealed ball bearings on central section
Sliding constant velocity joints	2 on front section
Universal joints	2 on rear section
Splined sliding coupling	rear on rear section
Spider radial clearance	0,01 ÷ 0,04 mm
Thickness of shims for adjusting spider radial clearance	1,5 - 1,53 - 1,56 - 1,59 - 1,62 - 1,65 mm
Spline backlash	0,175 ÷ 0,350 mm

Crown wheel and pinion reduction	41/14 (2,928)
Ratio on the wheels	21,322
	11,212
	7,320
	5,526
	3,944
	19,740
Bevel pinion bearings rolling torque	0,08 ÷ 0,12 daNm (0,081 ÷ 0,122 kgm)
Adjustment of bevel pinion position	by shims
Thickness of shims (FIAT 0,05 mm)	2,55 ÷ 3,35
Planet and satellite gears rolling torque	1 ÷ 6,8 daNm (1,02 ÷ 6,93 kgm)
Adjustment of planet and satellite gears rolling torque	by shims
Thickness of shims (FIAT 0,05 mm)	2,75 ÷ 3,25

00.27

Differential internal box bearing	conical roller bearings
Bearing pre-loading (adjustable by acting upon differential casing supports) mm	0,040 ÷ 0,050
Clearance between pinion and crown wheel mm	0,08 ÷ 0,15
Adjustment of clearance between pinion and crown wheel	by shims
Adjustment of bearing pre-loading	
Differential internal casing bearing pre-loading shim thickness (0,02) mm	6,50 ÷ 7,50

FRONT BRAKES

Values in mm

Disc	Ø	227
	s	10,70 ÷ 10,90
	s	9,70
	s < allowed	9
Brake linings	s < allowed	1,5
Caliper	Ø	48
Master cylinder (pump)	Ø	19,05 (3/4")

REAR BRAKES

Drum	Ø	185,24 ÷ 185,53
	Ø	186,33
	Ø > allowed	187
Brake shoes	s < allowed	1,5
Wheel cylinders	Ø	19,05 (3/4")

s = thickness

Type		rack and pinion
Ratio	no. of turns lock to lock	3,4
	rack travel	130 ± 1,5 mm
	Minimum turning circle	9,2 m
Steering angle	outer wheel α_1	31° ± 1° 30′
	inner wheel α_2	33° 30′
Front wheel toe in	unladen car (*)	– 4 ± 2 mm
	laden car (*)	+ 1,7 ± 2 mm
	Steering column	two piece with universal joints

(*) With tyres inflated to correct pressure

WHEELS

Tyre	type		145 SR 13
	front	for all load conditions	2 bars (2,04 kg/cm²)
	rear		
Rim	type		4.00B x 13"

NOTE *Snow chains can only be fitted to the front wheels: low profile type chains should be used with links smaller than 12 mm.*

WHEEL GEOMETRY

		unladen car (*)	laden car (*)
Front suspension	camber (**)	2° 20′ ± 30′	1° 25′ ± 30′
	caster	3° 30′ ± 30′	3° 30′ ± 30′
	toe in	– 4 ± 2 mm	+ 1,7 ± 2 mm
Rear suspension	camber (**)	–	–
	toe in (**)	–	–

(*) With tyres inflated to correct pressure
(**) Angles cannot be adjusted

00.44

COIL SPRING

Part number	5975433
Diameter of wire mm	10,6 ± 0,05
No. of turns	8,5
Direction of coil	clockwise
Height of spring released mm	364
Height of spring under a load of 241 ± 10 daN (246 ± 10 kg)	231
The springs are subdivided into two categories identifiable by a mark: – Yellow (*) for those under a load of 241 ± 10 daN (246 ± 10 kg) having a height of: – Green (*) for those under a load of 241 ± 10 daN (246 ± 10 kg) having a height of:	 > 231 ⩽ 231

(*) Springs of the same category must be fitted.

SHOCK ABSORBERS

Type	Way - Assauto telescopic, double acting
Part number	5947920
Colour	grey
Travel mm	148
Maximum extension mm	440 ± 2

LEAF SPRING

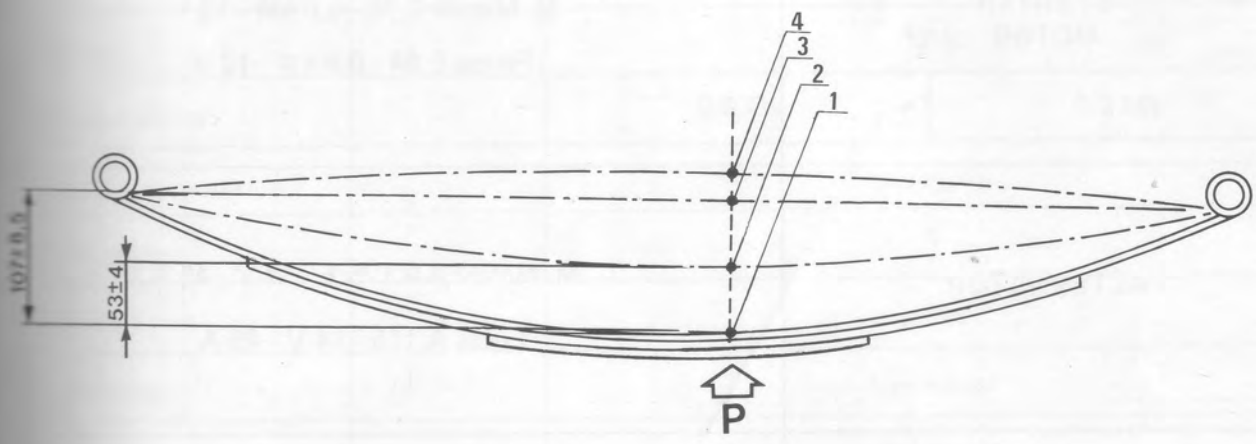

	Position	Load da N (kg)	Camber mm	Elastic yield starting from position 1	Flexibility mm/100 da N (mm/100 kg)
1	Initial flexibility test	100 (102)	–	–	45,4 (44,5)
2	Static load	134 (136,6)	42,5 ± 3	14,5 ± 1	
3	Final flexibility test	250 (255)	–	64 ± 5	
4	Settling test	280 (285,4)	–	76,5 ± 6	

SHOCK ABSORBERS

Type		Way - Assauto
		telescopic, double acting
Part number		5981774
Colour		grey
Travel	mm	145
Maximum extension	mm	341 ± 2

00.55

STARTER MOTOR	M. Marelli E 76 - 0,6 kW - 12 V Femsa E 84 - 0,8 kW - 12 V
ALTERNATOR	M. Marelli AA 125 E - 14 V - 45 A Lucas A 115 - 14 V - 45 A
VOLTAGE REGULATOR	M. Marelli RTT 114 A Lucas 37667
BATTERY	30 Ah
DISTRIBUTOR	M. Marelli S 156 CX Ducellier 6603 C
IGNITION COIL	M. Marelli BE 200 B Bosch 0.221.119.048 O.E.M. G 52 S
SPARK PLUGS	M. Marelli CW 7 LPR Champion RN 9 Y Bosch WR 7 D Fiat 1 L 4 JR Lodge HLNY/R

STARTER MOTOR			M. Marelli E 76 - 0,6 kW - 12 V	Femsa E 84 - 0,8 kW - 12 V
Voltage			12 V	
Nominal power			0,6 kW	0,8 kW
Rotation, pinion side			clockwise	
No. of poles			4	
Field coil			series	
Engagement			free wheel	
Operation			solenoid	
End float of armature shaft			0,1 ÷ 0,5 mm	
Data for bench test	Operating test (*)			
	current		170	155
	speed		1850	2000
	voltage		9,5	9,6
	torque developed		0,37	0,3
	Engagement test (*):			
	current	A	330	320
	voltage	V	7,1	7,3
	torque developed	daNm	⩾ 0,8	0,97
	Free running test (*):			
	current	A	30	35 ± 5
	voltage	V	11,6	11,5
	speed	1/min	7000 ÷ 8000	9000 ÷ 10000
Relay	Winding resistance (*)	pull in Ω	0,33 ÷ 0,37	0,23 ÷ 0,27
		hold in Ω	1,13 ÷ 1,27	0,88 ÷ 0,92
Lubrication	Internal splines and shaft bushes		VS+ SAE 10 W	
	Sleeve and intermediate disc		TUTELA MR3	

(*) Data obtained at an ambient temperature of 20° C.

NOTE *When overhauling it is not necessary to undercut the insulator between the commutator bars.*

STARTER MOTOR – TYPICAL CURVES

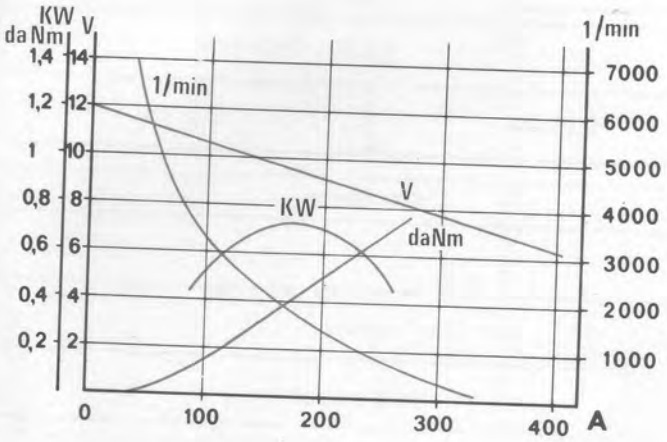

Starter motor Femsa E84 - 0,8 kW - 12 V

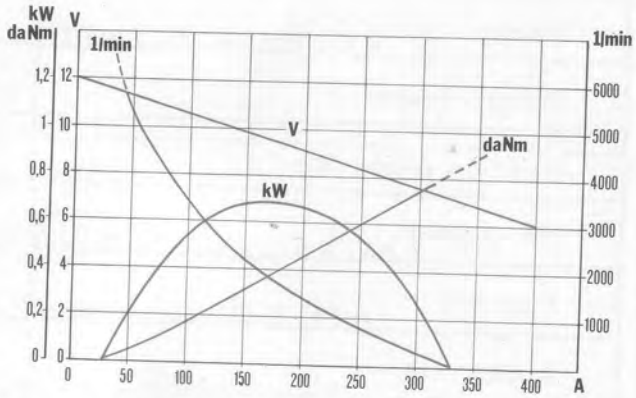

Starter motor M. Marelli E76 - 0,6 kW - 12 V

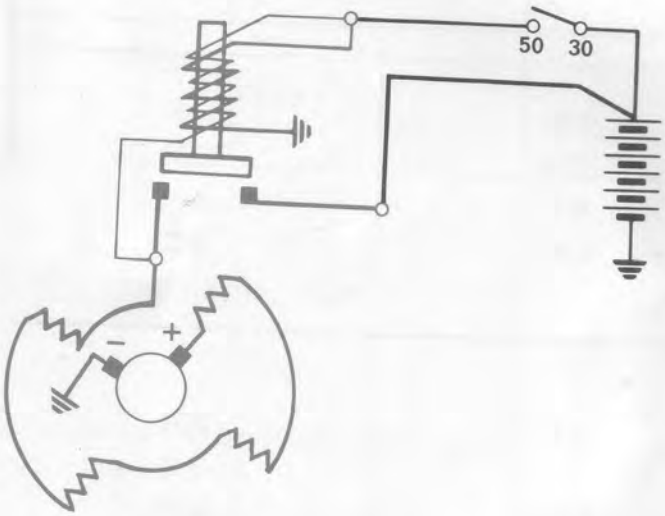

Starter motor wiring diagram

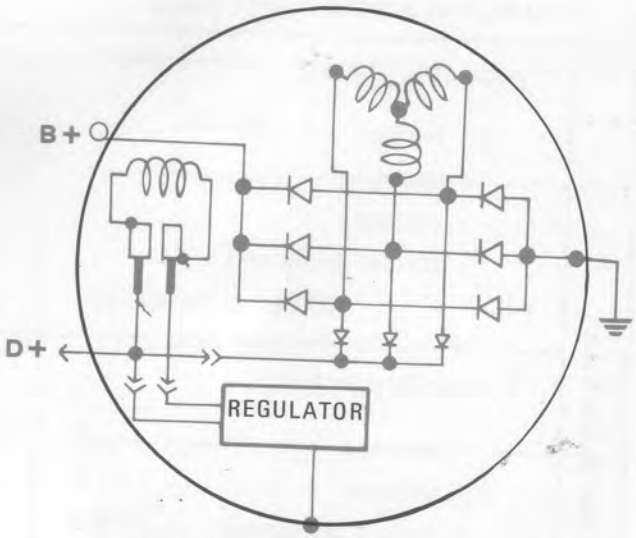

Alternator wiring diagram

ALTERNATORS – CHARACTERISTIC OUTPUT CURVES
(at a constant voltage of 13.5 V with bedded in brushes)

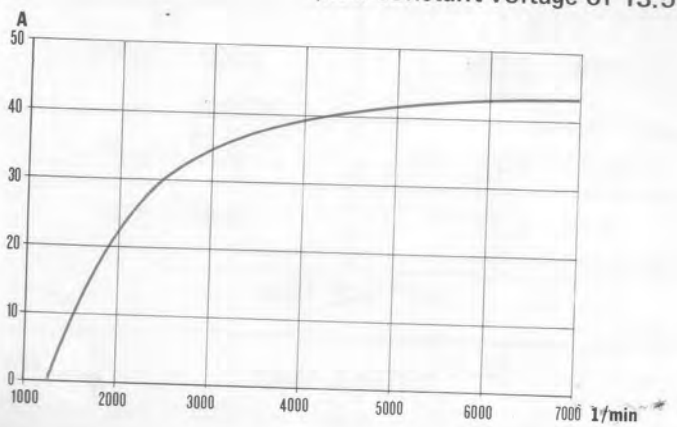

Alternator M. Marelli AA 125 - 14 V - 45 A

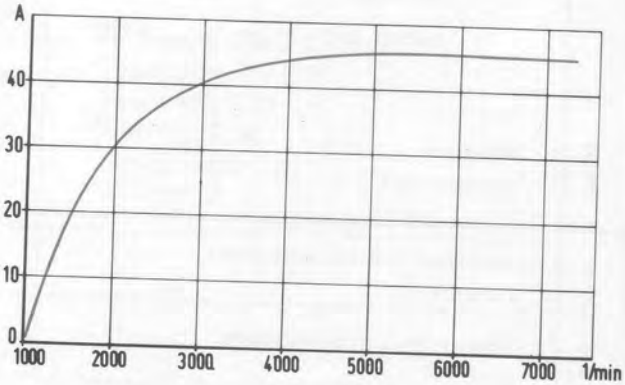

Alternator Lucas A 115 - 14 V - 45 A

ALTERNATOR

Make		M. Marelli	Lucas
Type		AA 125 E - 14 V - 45 A	A 115 - 14 V - 45 A
Nominal voltage	V	14	
Maximum current	A	~ 47	43
Cut in speed	1/min	1050	1250
Current delivery on battery at 7000 rpm	A	⩾ 45	43
Field winding resistance between the slip rings (*)	Ω	3,0 ÷ 3,2	3,04 ÷ 3,36
Direction of rotation (seen from the control side)		clockwise	
Engine/alternator transmission ratio		1,94	
Diode rectifier		bridge	

VOLTAGE REGULATOR

Type		Built in electronic M. Marelli RTT 114 A	Built in electronic Lucas 37667
Alternator speed for test	1/min	6000	
Thermal stabilization current	A	20 ÷ 25	
Test current	A	5 ÷ 45	
Regulation voltage (*)	V	14 ÷ 14,3	

BATTERY

Nominal voltage	V	12
Capacity (20 hour discharge)	Ah	30

(*) Data obtained at an ambient temperature of 20° C.

DISTRIBUTOR

Make	M. Marelli	Ducellier
Type	S156 CX	6603 C
Firing order	1 - 3 - 4 - 2	
Static advance	5° ± 2° (*)	
Automatic centrifugal advance	32° ± 2°	
Contact breaker gap	0,40 ± 0,03 mm	
Opening angle	35° ± 3°	
Dwell angle	55° ± 3°	
Condenser capacity at 50 – 1000 Hz	0,25 ± 0,025 μ F	

(*) 850 ± 50rpm

IGNITION COIL

Make	M. Marelli	Bosch	Martinetti
Type	BE 200 B	0 221 119 048	G 52 S
Ohmic resistance of primary winding at 20° C Ω	3,0 ÷ 3,3	2,6 ÷ 3,1	2,7 ÷ 3,0
Ohmic resistance of secondary winding at 20° C Ω	8460 ÷ 10340	8500 ÷ 12000	6745 ÷ 7455

SPARK PLUGS

Make and type	M. Marelli CW 7 LPR – Bosch WR 7 D Champion RN 9 Y – Fiat 1 L 4 JR Lodge HLNY/R
Electrode gap	0,7 ÷ 0,8 mm

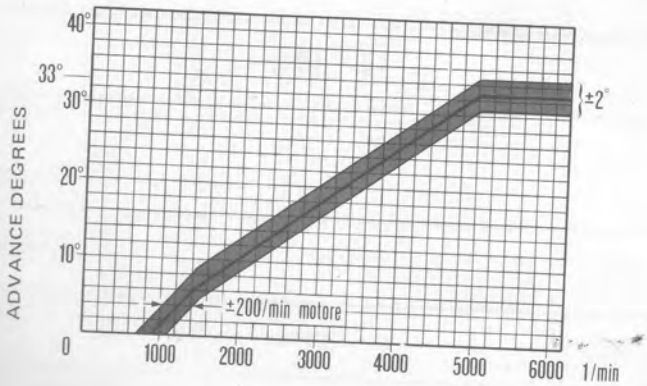

Diagram showing ignition advance curve

WEBER 32 DATR 10/100 CARBURETTOR

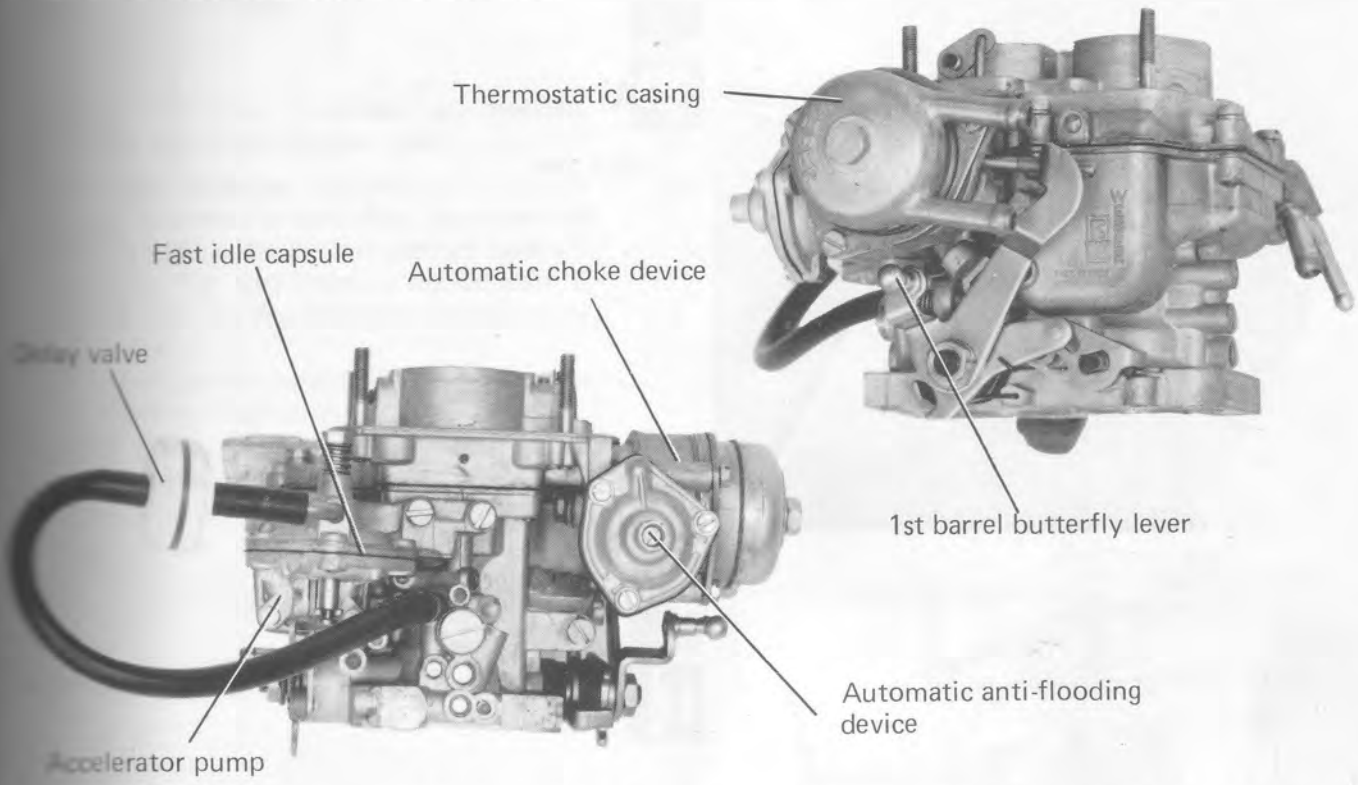

NOTE *When the carburettor is fully dismantled, check all the calibrated parts (main jets, idle jet, emulsion tube etc). The value of the above mentioned parts must correspond to the prescribed adjustment figures for that type of carburettor.*
To clean all the carburettor components thoroughly, use the appropriate solvent bath and blow through with compressed air. When cleaning the calibrated jets avoid using metal wires. All the seals and carburettor springs are replaced each time the carburettor is overhauled.
Check the needle valve seat for leaks, the main butterfly spindle clearance, the flatness of the support surfaces at the manifold and that the float is not perforated.

ACCELERATOR PUMP – Checking flow rate

NOTE *Fill the chamber with petrol and operate the main butterfly lever several times (from min to max) until the circuit is completely full and there is a regular supply to the pump injector.*

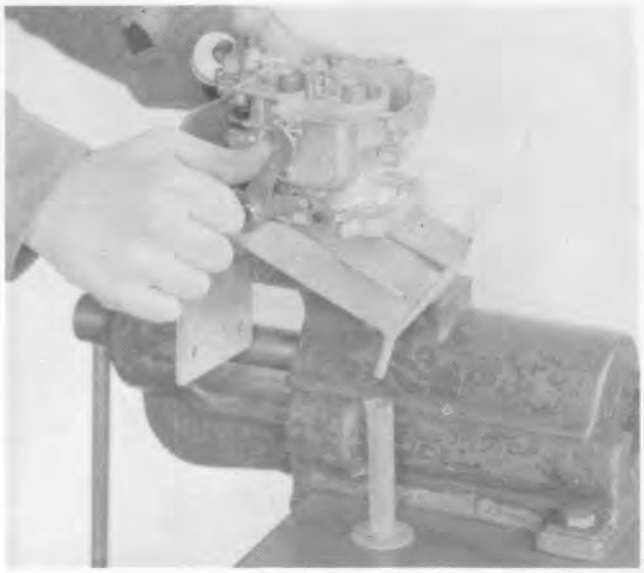

Then, carry out the test as follows:

- For 10 successive deliveries pause with the butterfly completely open after each one and ensure that the pump jet has finished delivering before beginning the return stroke to idle. In addition, stop the pump for a few seconds in the idle position and allow it to refill completely.
- The pump flow rate capacity i.e. the amount of fuel collected in the test tube after 10 deliveries should be between 7 and 11 cc.

The petrol which comes out of the pump jet must not spray against the Venturi of Auxiliary Venturi but must be as vertical as possible.

10.

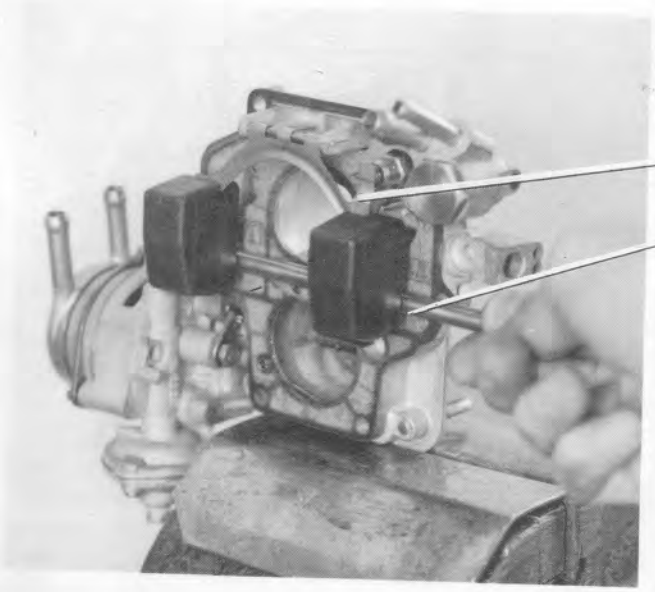

FLOAT LEVEL

If the float level (with the gasket fitted) is not 7 mm, it is necessary to adjust the float arm (A).

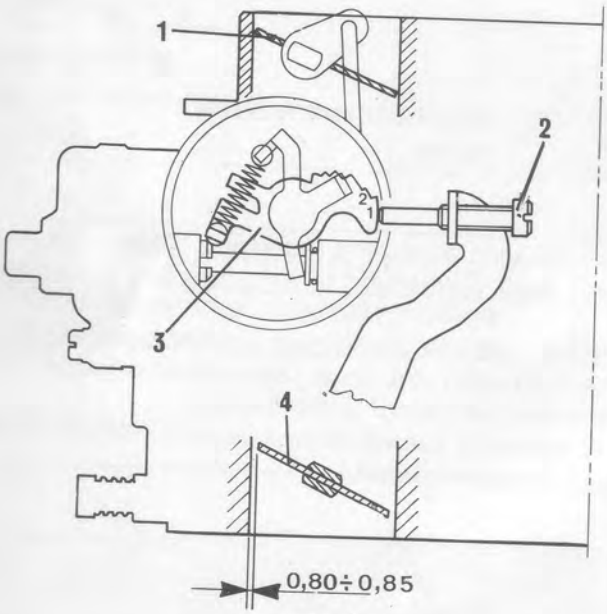

SEMI–AUTOMATIC CHOKE

Follow the order of the adjustments listed below.

Fast idle adjustment

- With the strangler butterfly (1) in the closed position ensure that the screw (2) is resting on the **1st cam step (3)**.
- Adjust the screw (2) until the main butterfly (4) opening is 0.80 - 0.85 mm.

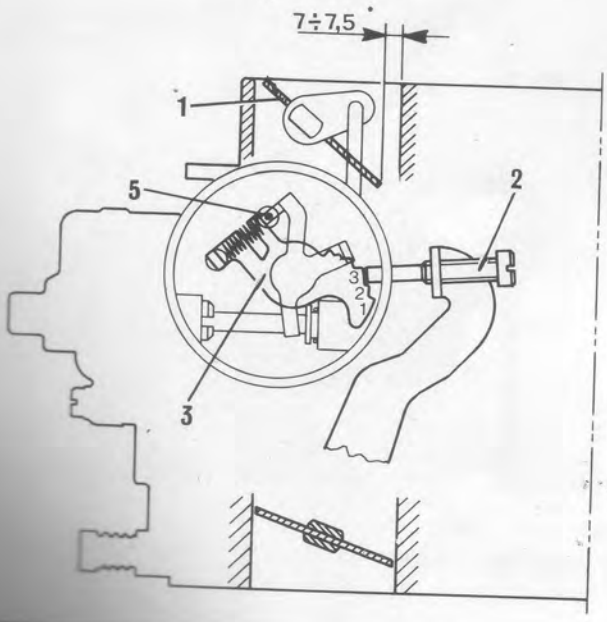

Fast idle cam timing

- Position the screw (2) on the **3rd cam step (3)**.
- In this position the strangler butterfly (1) opening should be 7 - 7.5 mm.
- If this is not the case, adjust the arm (5), bending it slightly.

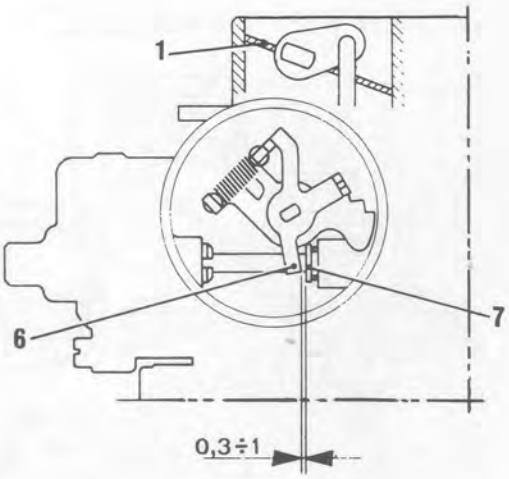

Adjusting clearance between anti-flooding device stem and choke control lever

- With the strangler butterfly (1) in the closed position, ensure that the **clearance** between the appendix (6) and the bush (7) plane on the anti-flooding device stem is **0.3 - 1 mm (bush-anti-flooding device lever clearance)**.
- If this is not the case, adjust the appendix (6), bending it suitably.

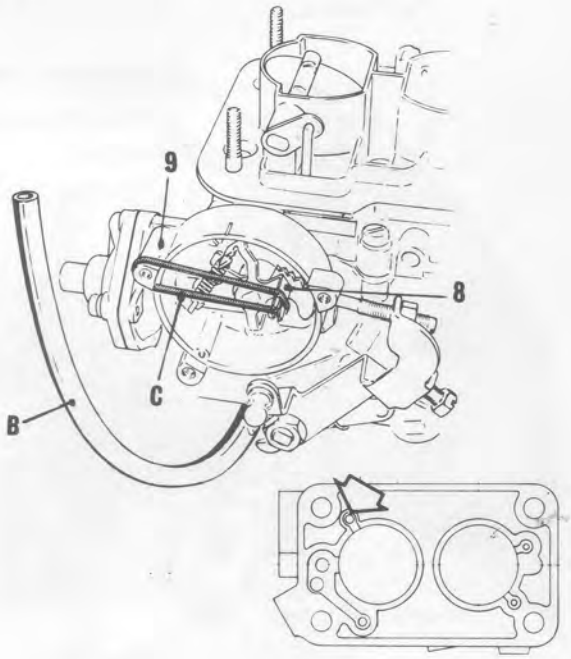

Adjusting automatic anti-flooding device

- Insert a conical pipe union which is connected to a plastic tube (B) in the hole shown by the arrow.
- To simulate the action of the bimetallic spring when cold, connect the fork (8) to the hub (9) or any other point as long as the fork is drawn towards the anti-flooding device diaphragm using an elastic band (C). Then, carry out the following tests.

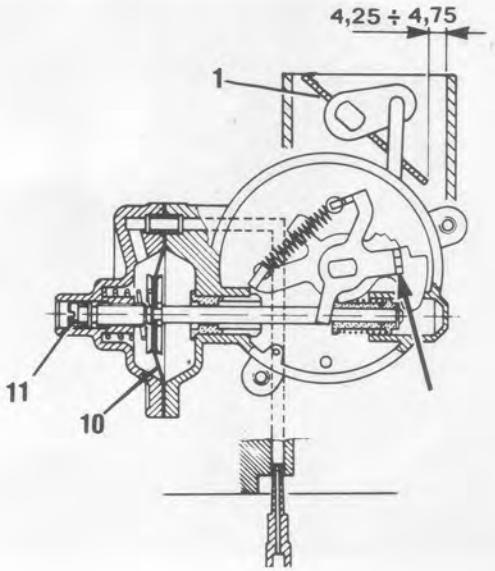

Adjusting strangler butterfly minimum opening

- Open and close the main butterfly to engage the choke.
- Create a suitable vacuum in the plastic tube (B) (this can be achieved by moving the diaphragm rod completely to the left).
- The movement of the diaphragm (10) will cause the strangler butterfly (1) to open 4.25 - 4.75 mm.
- If this does not take place, adjust the screw (11) until the opening is correct.

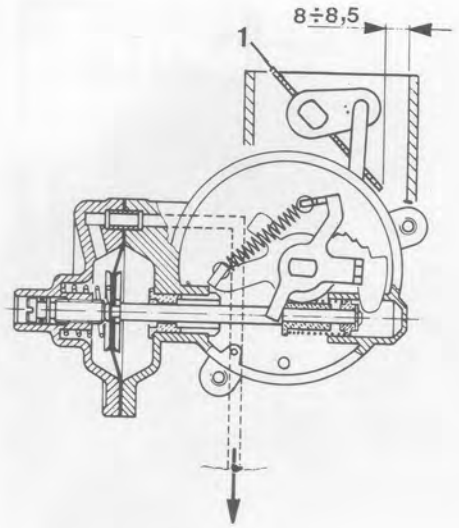

Checking maximum strangler butterfly opening

- With the choke completely out, maintaining the vacuum in the plastic tube, remove the rubber band.
- Check that the strangler butterfly opening is 8 - 8.5 mm.
- If the value measured does not correspond with the above figures, replace the anti-flooding device diaphragm and repeat the previously described adjustments.

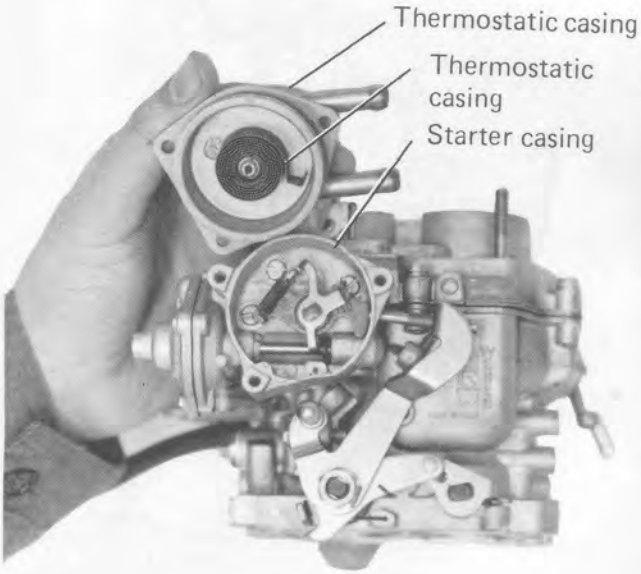

THERMOSTATIC CASING – Checks

Check that there are no deposits in the thermostatic casing and that the seals do not leak.
Check the strangler butterfly shaft and components for wear.
Check that nothing is preventing the strangler butterfly from closing completely.
Check that the bimetallic spring winding is even.
Check the thermostatic casing central pin and ensure that the bimetallic spring is held steady.
Inspect the heat transmission plane and check that the bimetallic spring is not fouling the casing.
It is advisable to replace the thermostatic casing after 50,000 km (30,000 miles).

NOTE *The thermostatic casing is available as spare with reference mark* B, *which is lined up with reference mark* A *on the starter casing to ensure correct positioning, already stamped on it.*

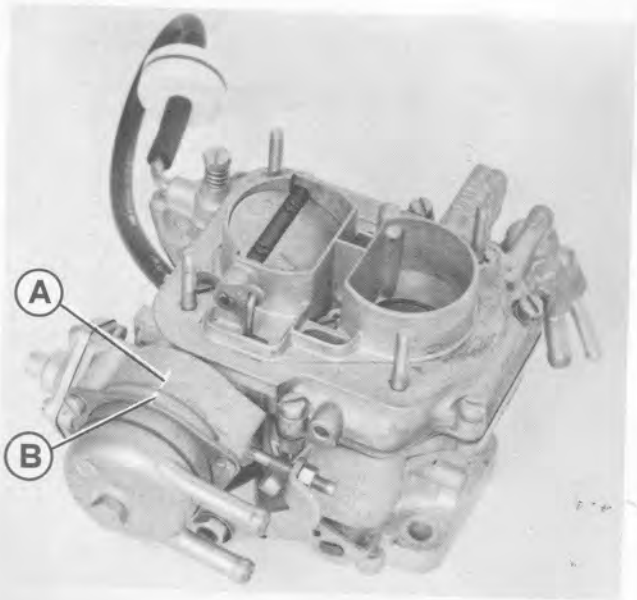

FAST IDLE (modulated by Delay valve)

This device delays the return to idle of the accelerator butterfly.
During acceleration and constant speeds under load the accelerator butterfly uncovers the calibrated hole (1).
In these conditions, the Delay valve transmits a vacuum to the capsule (3) which moves the lever (2) upwards.

During deceleration the lever (2) holds back the accelerator butterfly in its return stroke and positions it in such a way that the edge is below the calibrated hole (1). The vacuum in the capsule is slowly discharged via the Delay valve allowing the accelerator butterfly to return to idle.
With the throttle closed, for short acceleration or at constant speeds at low loads the device does not come into operation and avoids the reduction of the effect on engine braking.

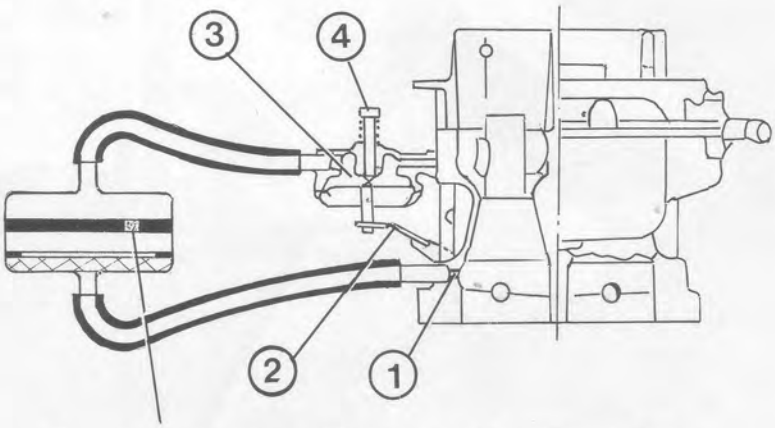

Restriction is achieved by means of a sintered disc (Delay valve)

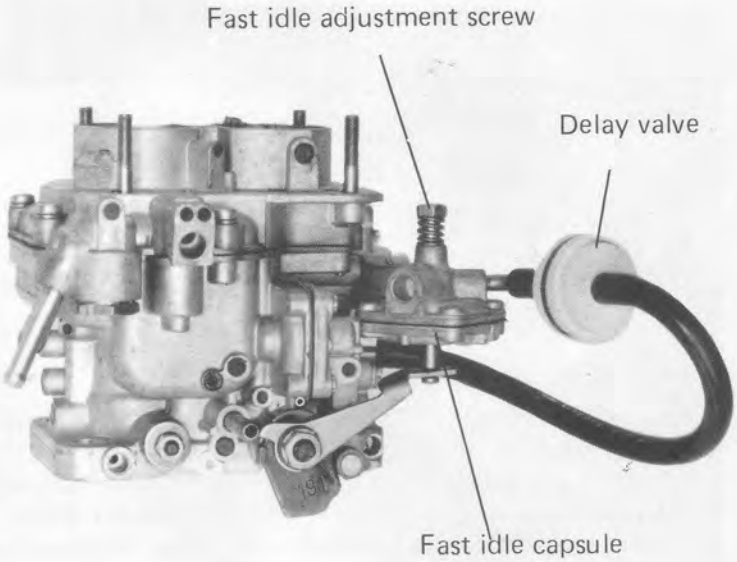

Adjusting fast idle

- With the engine warm, bring the engine speed to 3500 rpm using the accelerator.
- Maintain this condition for the amount of time necessary to ensure that the capsule (3) is at the end of its travel.
- Using self-locking pliers, clamp one of the Delay valve rubber tubes.
- Adjust the engine speed to 1600 - 1800 rmp using the fast idle capsule (3) adjustment screw (4).
- Release the self-locking pliers and check that the lever (2) returns to the normal idle position.

Carry out this adjustment with the air filter fitted.

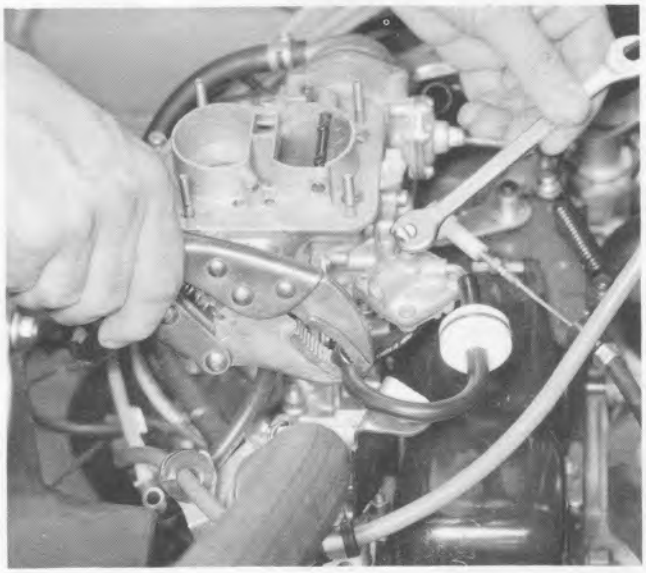

IDLE ADJUSTMENT ON VEHICLE

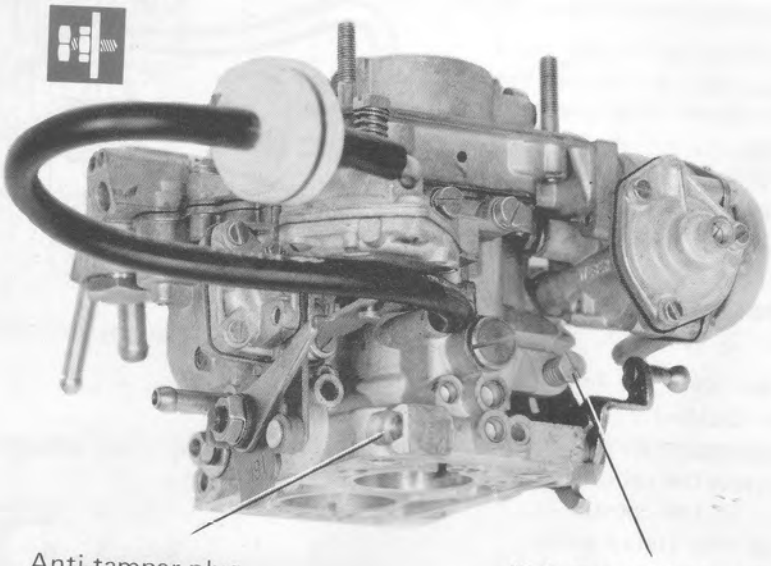

NOTE *The idle adjustment is carried out when the engine is warm, the air filter fitted and the choke completely in.*

Then carry out the adjustment as follows:

- Introduce the exhaust gas analyzer sensor into the end section of the silencer.
- Install an accurate rev counter.
- Remove the anti-tamper plug from the idle mixture adjustment screw, where present.
- Using the main butterfly opening adjustment screw, bring the engine to a speed of 850 ± 50 rpm.
- Using the idle mixture adjustment screw, regulate the mixture strength until the engine is operating smoothly also checking the CO (carbon monoxide) exhaust emissions are equal to or less than 3.5% (EEC legal limit is 4.5%).
- Re-adjust the two screws unit the required values are obtained.
- Refit a new anti-tamper plug on the idle mixture adjustment screw which should be a different colour from the original one.

Gearbox and front differential
Removing-refitting

21-27.

Position the vehicle on the lift in such a way that it is possible to remove the gearbox - differential unit from the lower section of the engine compartment and proceed as follows:
- Remove the spare wheel.
- Remove the front wheels.
- Disconnect the earth cable from the battery.

- Remove the propeller shaft from the gearbox - differential unit.

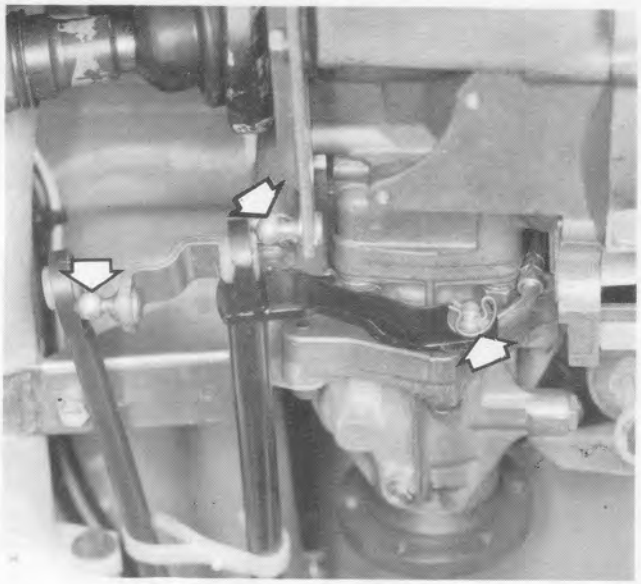

- Remove the rods from the gear control levers and rear transmission clutch.

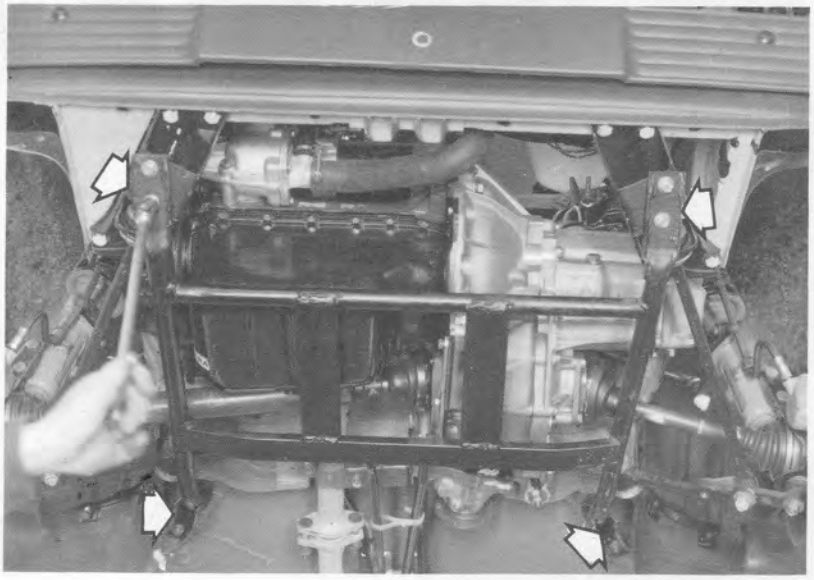

- Remove the power unit shield.

21-27.

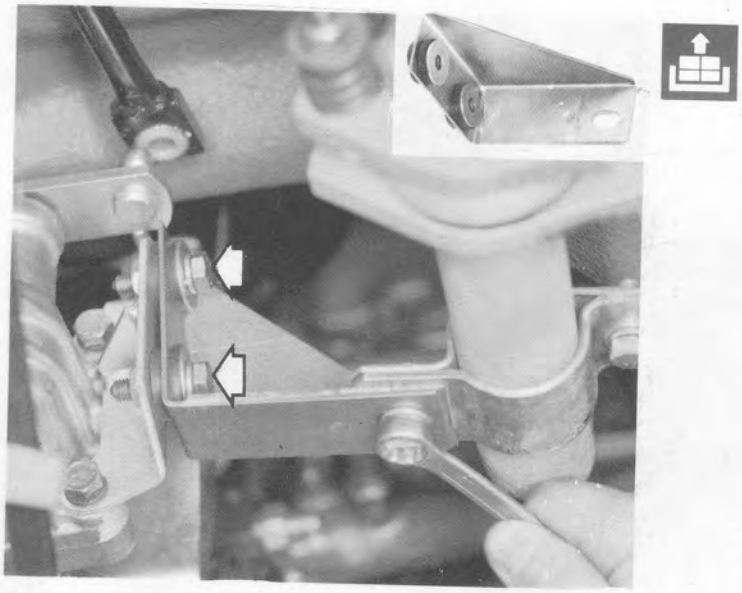

– Remove the bracket supporting the exhaust pipe.

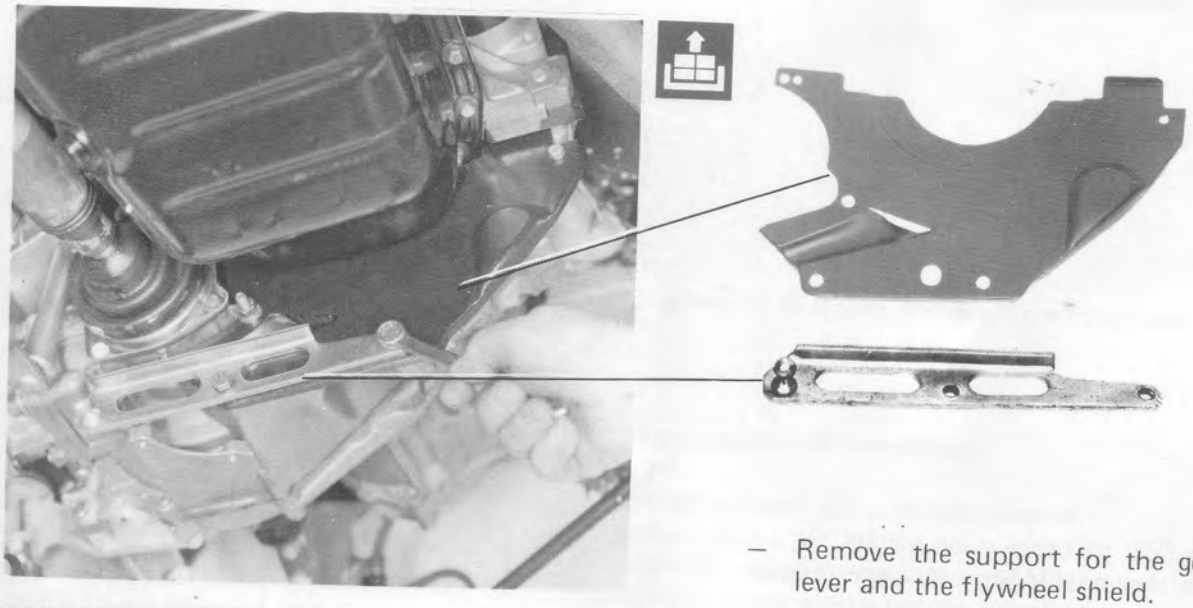

– Remove the support for the gear selector lever and the flywheel shield.

– Remove the side rods from the steering control levers on the steering knuckles.

- Remove the three-lobe joint protective boots, remove the actual joints from the differential and position them at the side.

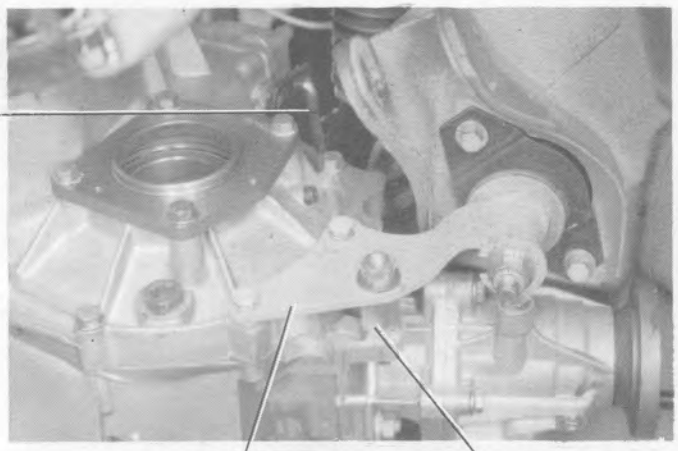

- Disconnect the speedometer cable.
- Remove the rear gearbox support and remove the spacer shown.

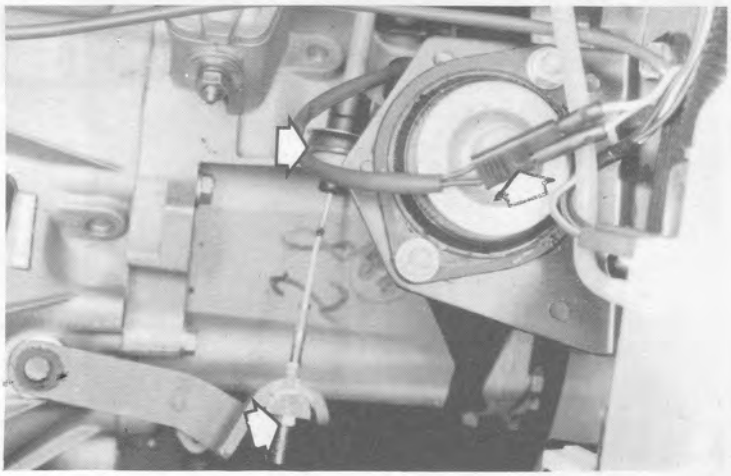

- Remove the clutch release cable and casing from the appropriate couplings.
- Disconnect the connecter for the reversing light cables.

- Remove the starter motor from the gearbox to engine mounting and place it in the engine compartment.

21-27.

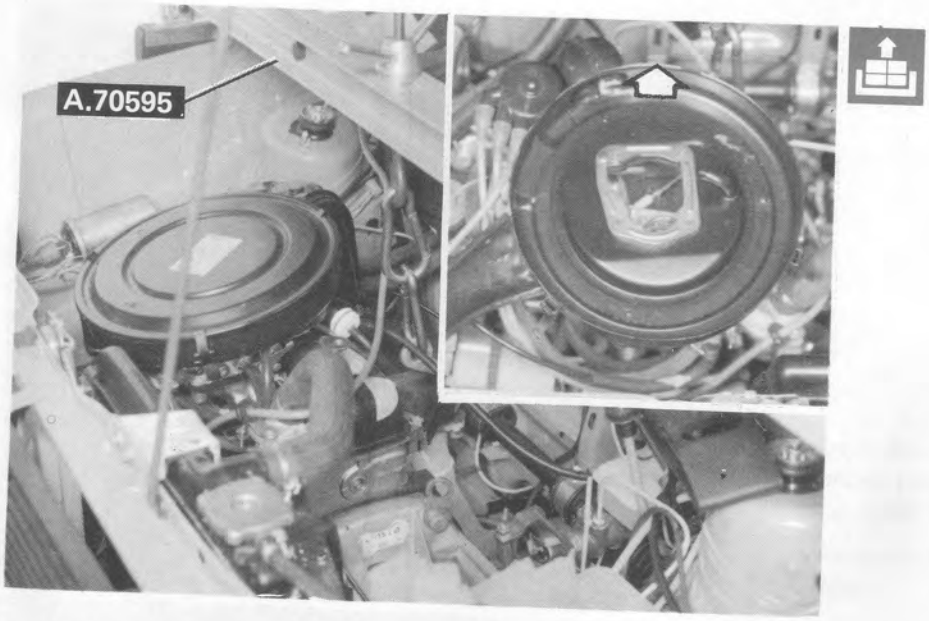

- Move the air filter backwards after having released it from the carburettor.
- Place cross member A.70595 in position and support the engine with the hook.

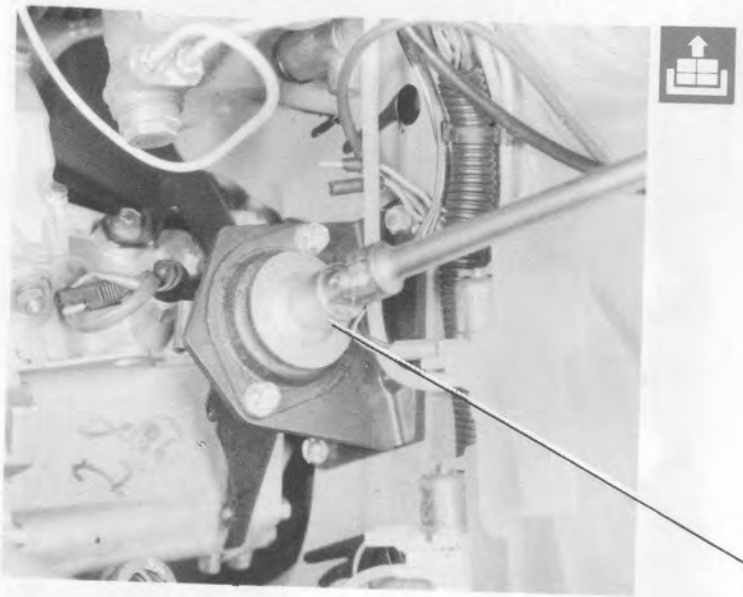

- Loosen the bolt on the flexible mounting.

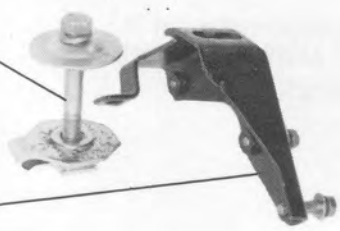

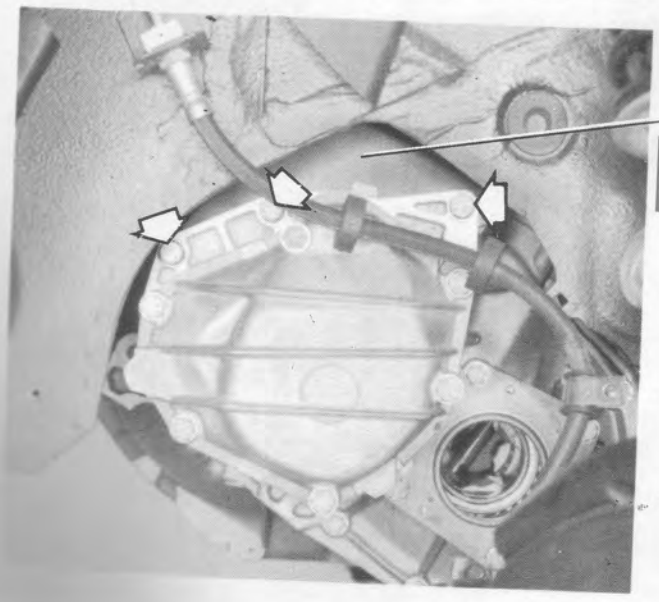

- Remove the gearbox support bracket.

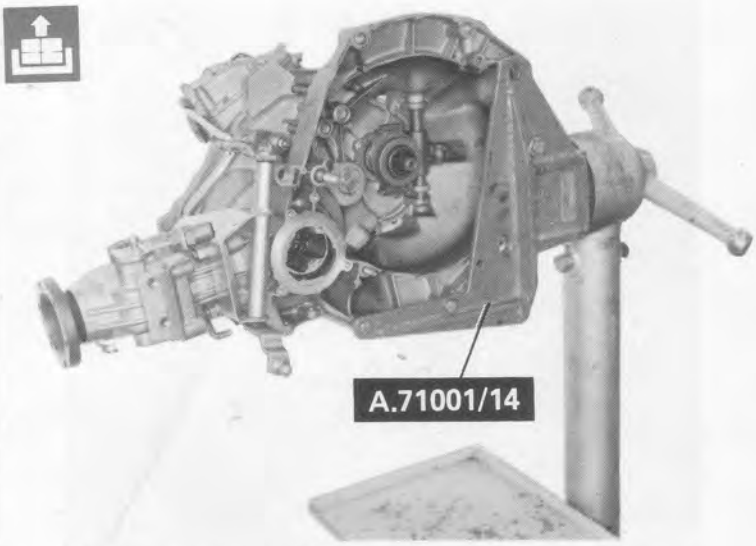

Fitting gearbox-differential unit on rotating stand for overhauling operations

- Lower the power unit via the support hook on tool A.70595.
- Move the gearbox - differential unit support tool A.70558 ready and the hydraulic jack in position.
- Loosen the bolts fixing the gearbox - differential unit to the engine.
- Suitably manoeuvre the gearbox - differential unit so that it is released from the centering lugs on the engine and the clutch shaft is free of the driven disc.
- Lower the hydraulic jack and remove the gearbox - differential unit.

NOTE *To refit the gearbox - differential unit, simply reverse the order of the operations carried out for its removal.*

Clutch pedal height.

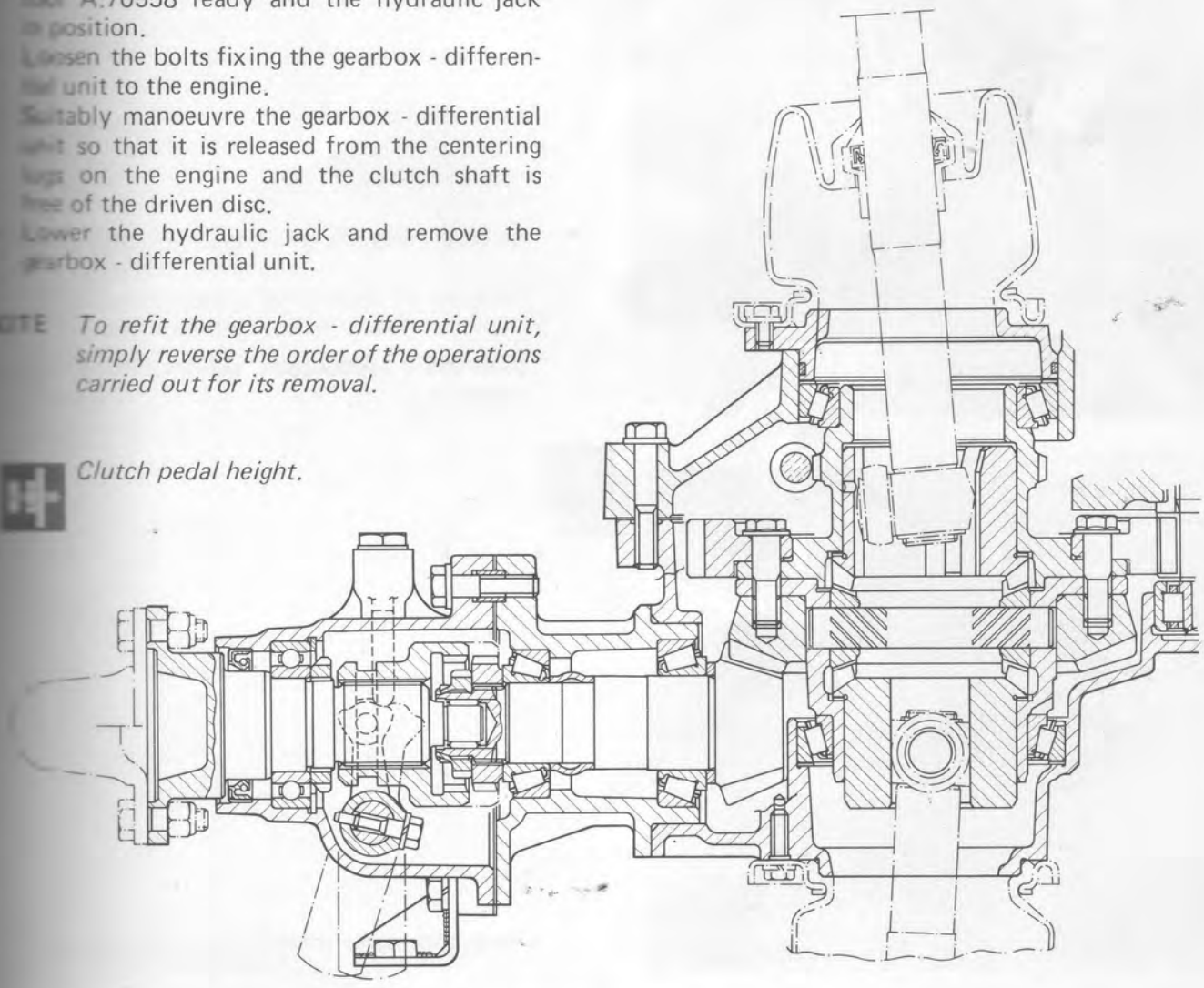

21-27.

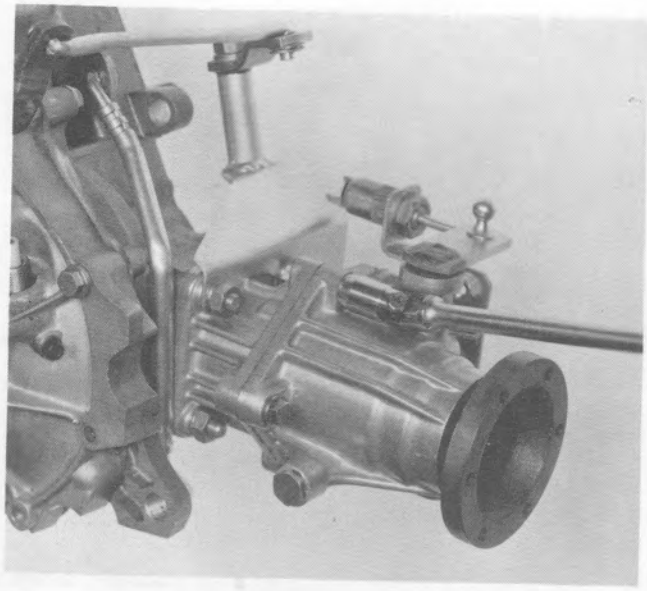

Removing rear transmission clutch assembly

Firstly drain the oil from the gearbox using spanner A.50113.

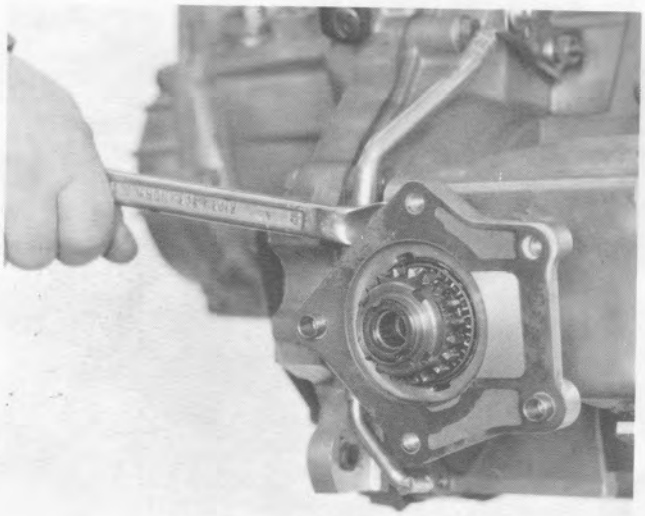

Removing reduction pinion with relative support

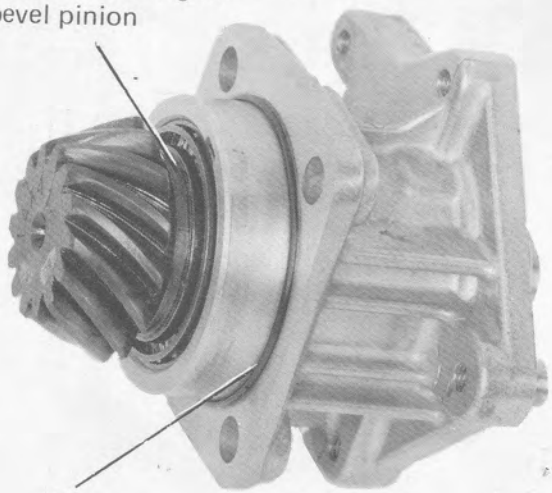

Reduction gear pinion complete with support

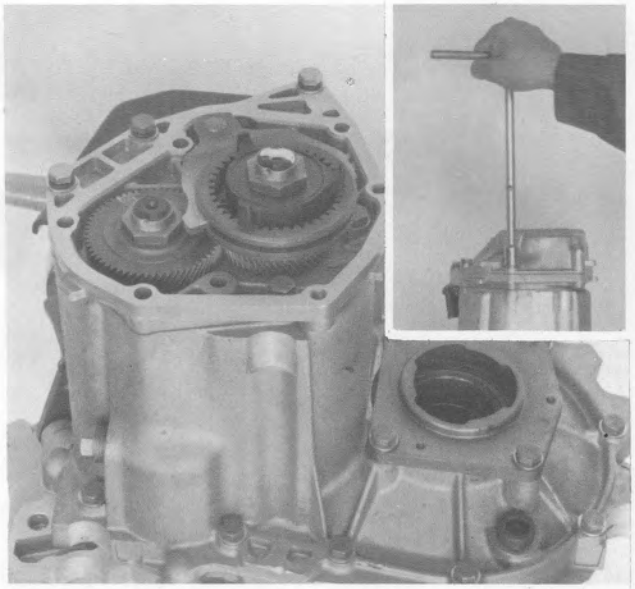

Removing rear cover

NOTE *The ring nuts fixing the gears must be staked after fitting.*
Consequently, they must be replaced each time they are removed.

Removing 5th speed engagement hub, fork and sleeve.

Removing 5th speed gears.

21-27.

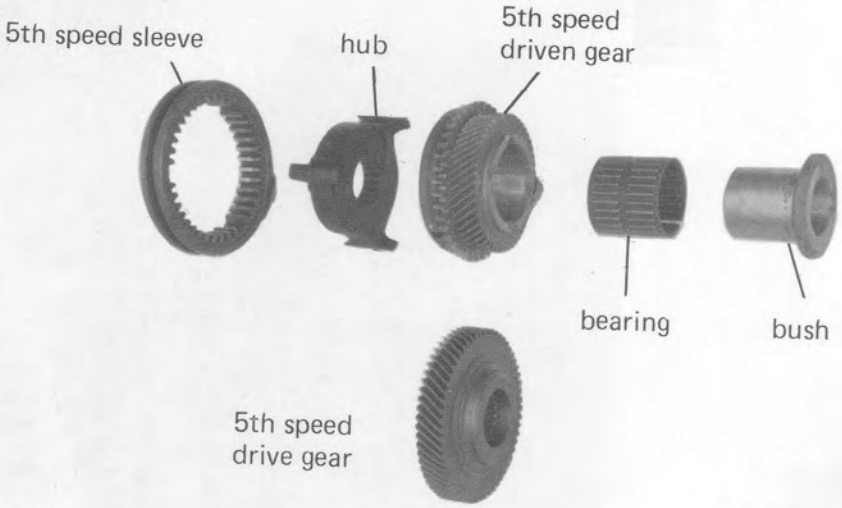

5th speed components

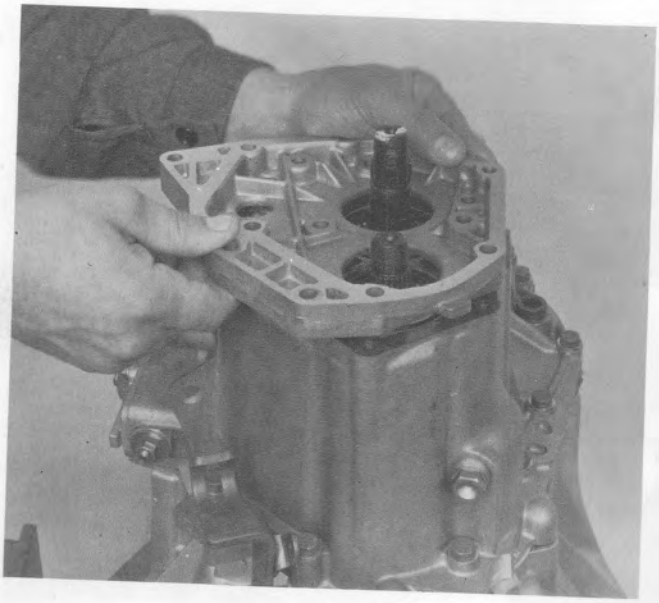

Removing intermediate cover

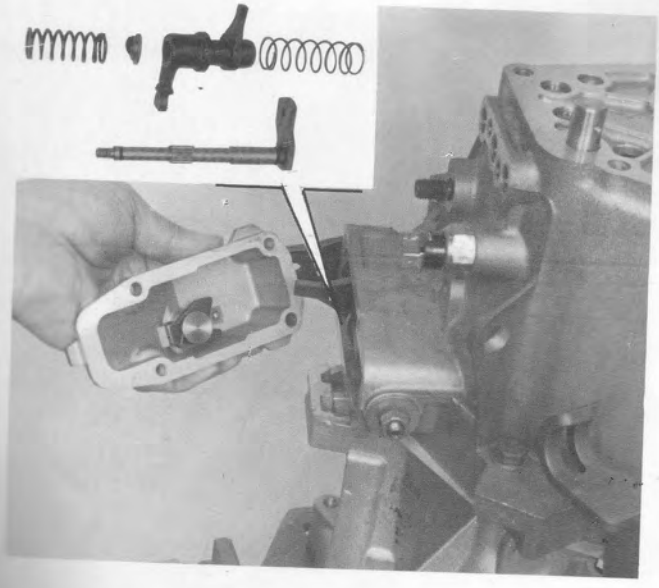

Removing cover for gear engagement control shaft.

The inset at the top shows the gear engagement control components.

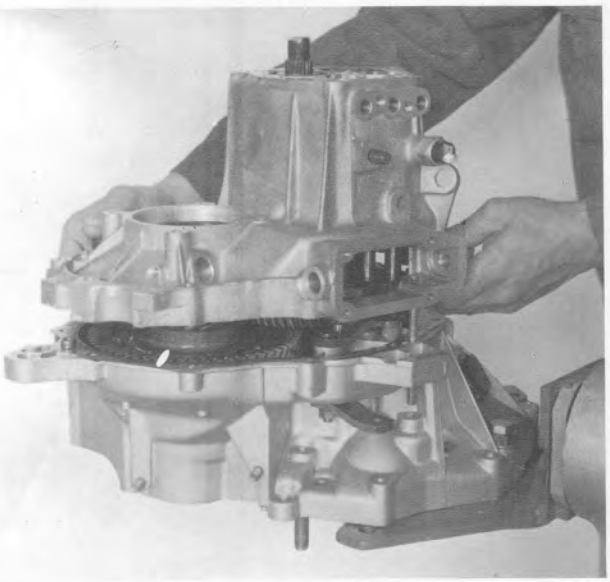

Dismantling gearbox casing.

Remove the rods, selector forks and gears as described in the relevant chapter in the publication FIAT PANDA print no. 503.884.

Checking gearbox to engine mounting, central casing, rear cover

NOTE *The casing and the mounting should not show signs of cracks; be bearing and rod seats should not be worn or damaged.*
The contact surfaces should be flat (small imperfections can be removed by filing).

Ensure that the oil breather is not obstructed.
The casing and mounting are supplied as a matching pair.

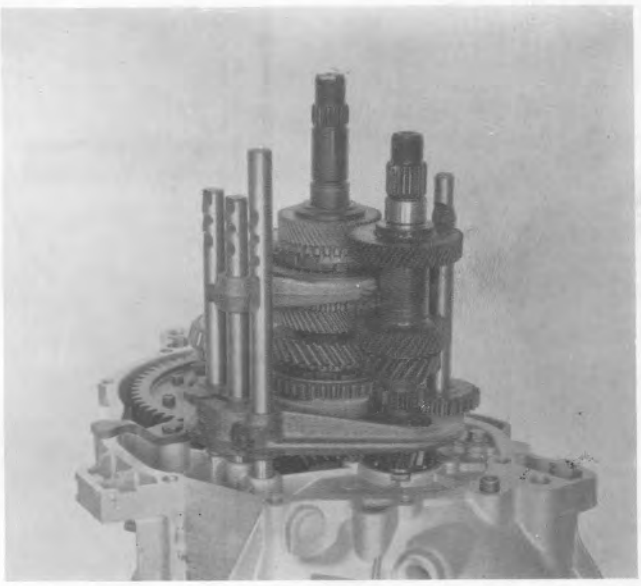

Remove differential bearing outer track.

21-27.

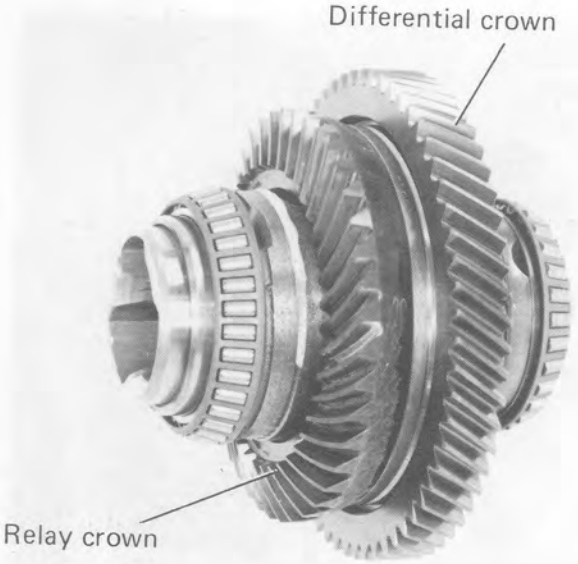

REMOVING DIFFERENTIAL

Differential unit.

Removing roller bearings from differential casing.

The bearings are replaced each time there are signs of grooves, hot spots or excessive wear.

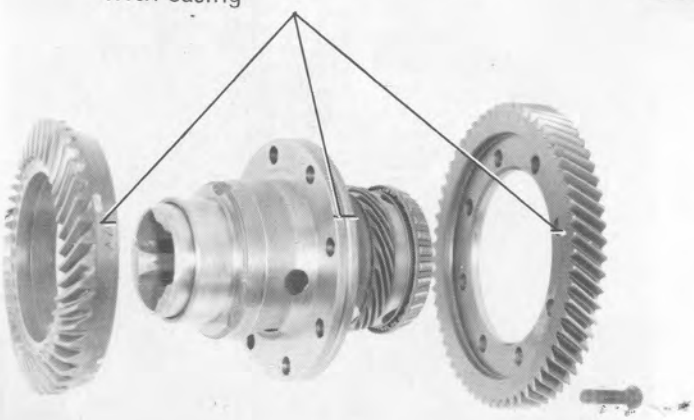

Removing crown wheel from differential casing

Mark all the components before starting to remove them.

It is advisable to replace the pinion whenever the crown wheel needs replacing.

The reduction gear crown wheel and pinion are supplied as a matching pair; if one of them were damaged, both would have to be replaced.

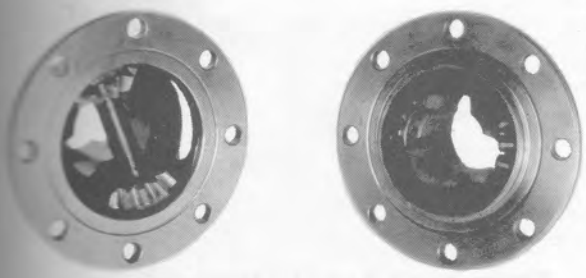

Removing and dismantling differential casing and satellite carrier shaft

There should not be any signs of seizing or wear on the **satellite carrier shaft** or excess clearance with the casing.
There should not be any chips or wear on the contact surfaces of the **satellite and planet gears.**

FITTING DIFFERENTIAL

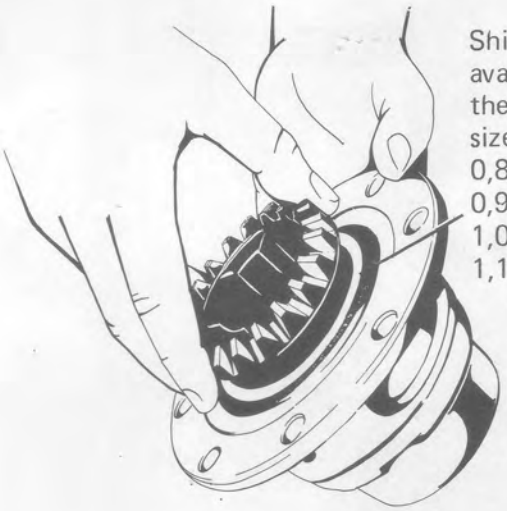

Shims are available in the following sizes: 0,85-0,90-0,95-1,00-1,05-1,10-1,15

Positioning planet gear adjustment shim

Fitting and checking clearance between planet and satellite gears

NOTE *Move the shim to match the planet and satellite gears.*
This matching is correct when the unit rotates without clearance and with a slight resistance.

21-27.

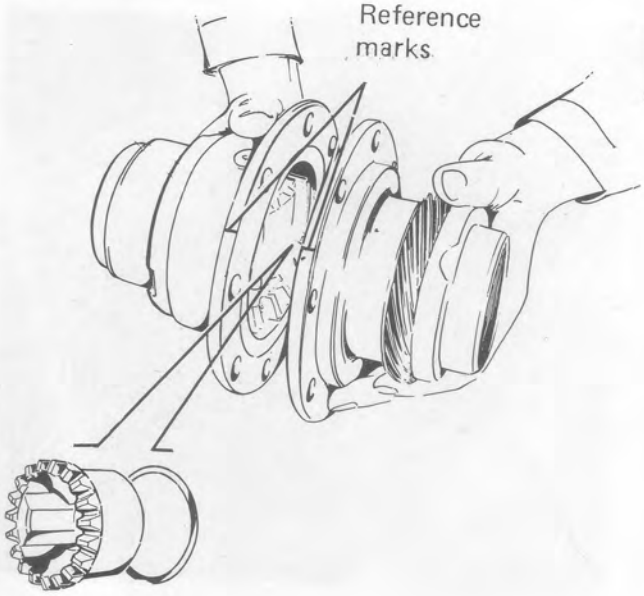

Fitting two halves of differential

Ensure that the reference marks on the two halves coincide.

NOTE *The shims fitted on the planet gears must be the same thickness.*

Lubricate the parts concerned with transmission fluid before fitting.

Fitting differential casing bearings

Both bearings, which are different sizes, are fitted using tool A.70294.

Fitting crown wheel

BEVEL PINION

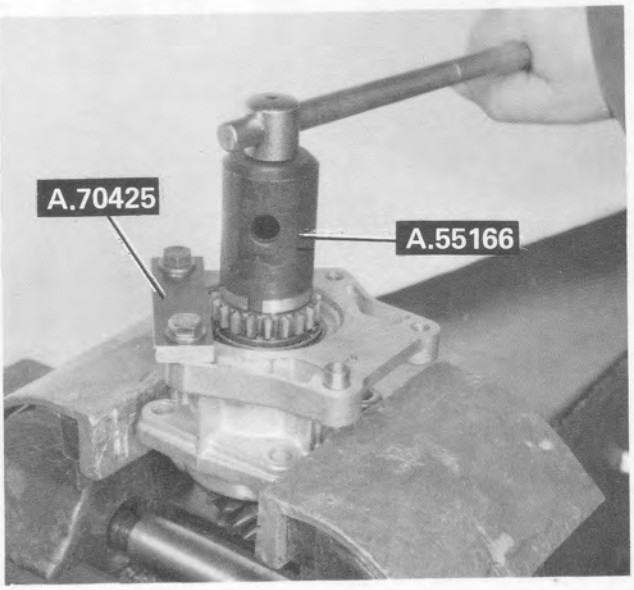

Removing bevel pinion

To loosen the ring nut, stop the rotation of the pinion using tool A.70425 and use spanner A.55166.

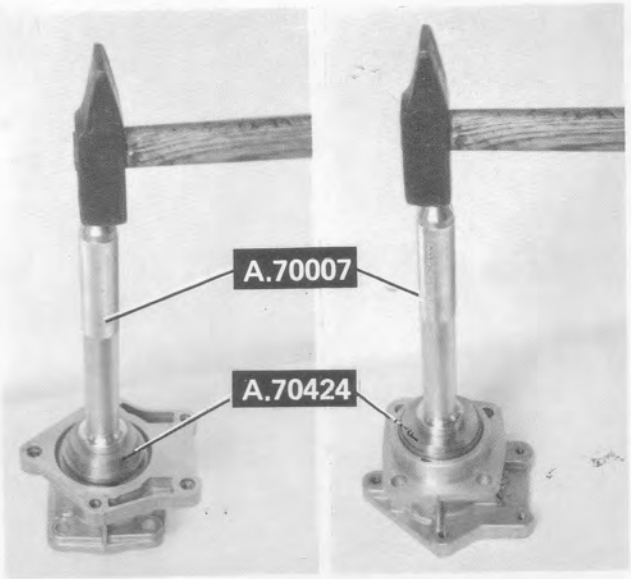

Fitting bevel pinion bearing outer races on support.

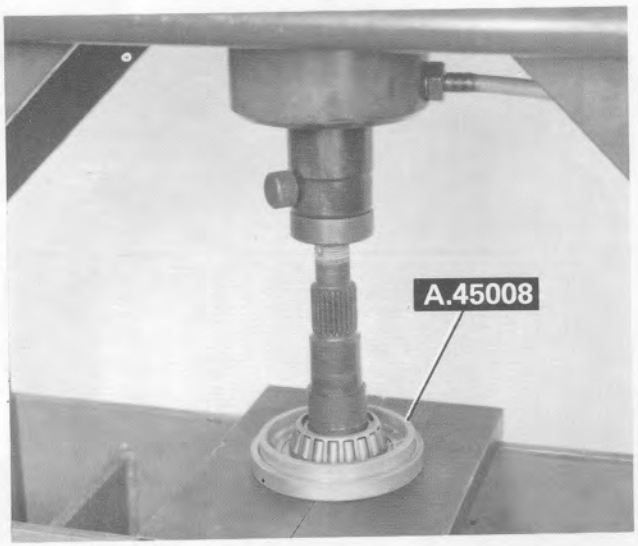

Removing bevel pinion rear roller bearing inner race

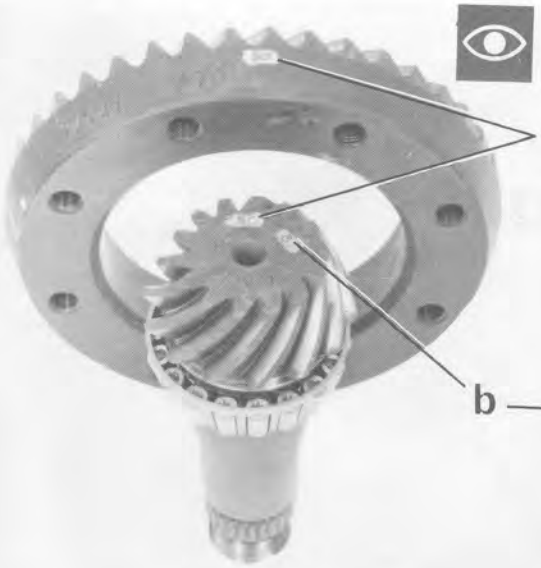

Determining thickness of adjustment shim

Production number and matching number for crown wheel

1st case) Centesimal value of the difference between the effective fitting distance and the nominal one. (e.g. – 2.0 + 3)

2nd case) Value of effective fitting distance in millimetres.
(e.g. 80.95 – 81 – 81.02)
Always go up to the value as expressed in the first case, algebraically subtracting 81 mm from this measurement.
(e.g. 80.95 – 81 = – 0.05 mm = – 5 hundreths
81.02 – 81 = + 0.02 mm = + 2 hundreths

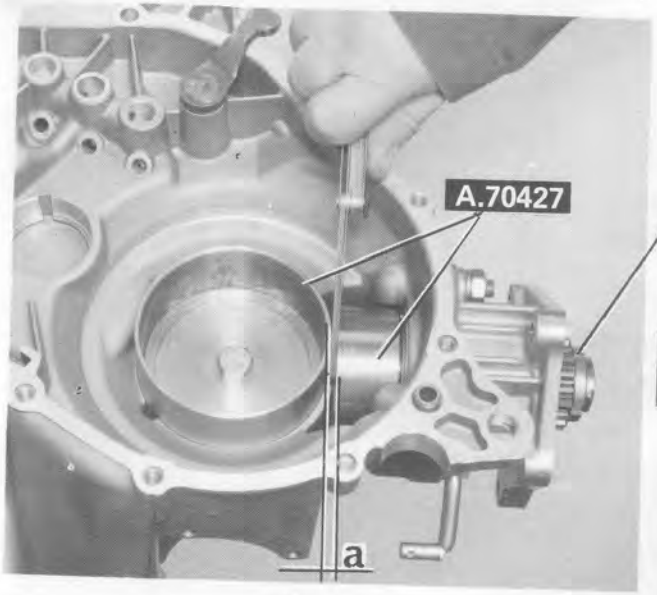

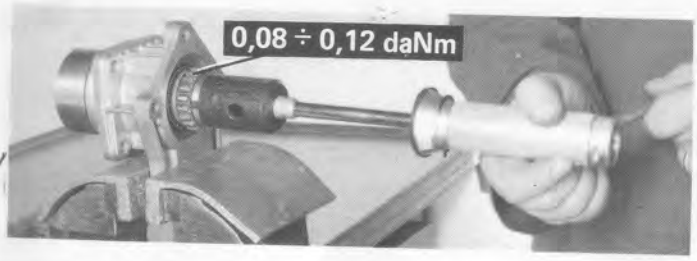

When fitting the dummy pinion A.70427, proceed as if fitting the bevel pinion except for fitting the rubber spacer between the bearings. (Tighten the ring nut so that the dummy pinion is set at the correct torque).

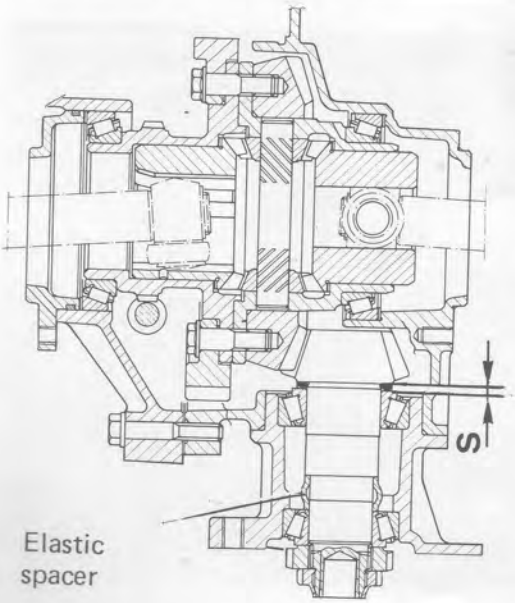

If "a" is the value measured whith A.70427 and "b" that on the bevel pinion, then the thickness "S" of the shim to be fitted will be:

S = a – (+ b) = a – b or **S = a – (– b) = a + b**

In other words:

- If the number marked on the pinion is preceded by a plus sign then the thickness of the shim is obtained by subtracting the number from the value measured with A.70427.
- If, however, the number marked on the pinion is preceded by a minus sign, then the shim size is obtained by adding the number to the value measured by A.70427.

If the value obtained by this method does not correspond to the size of the shims available, fit the nearest larger size shim.

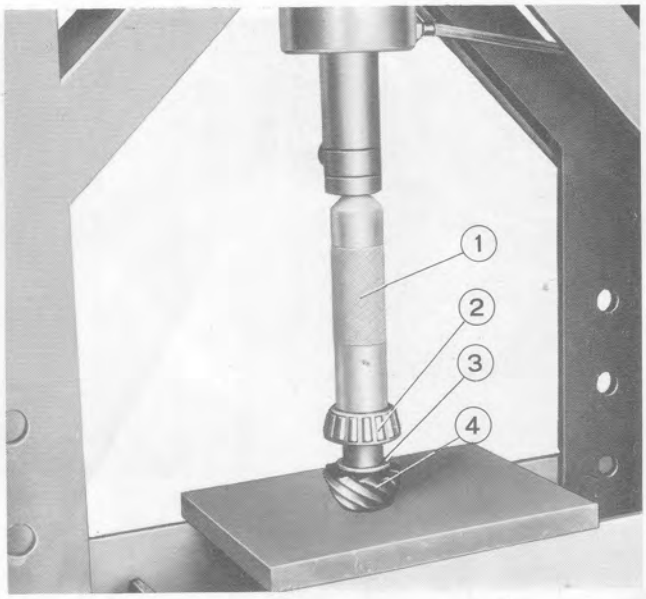

Fitting rear roller bearing inner race on the bevel pinion on the press

1. Drift A.70152
2. Rear roller bearing inner race
3. Support ring
4. Bevel pinion

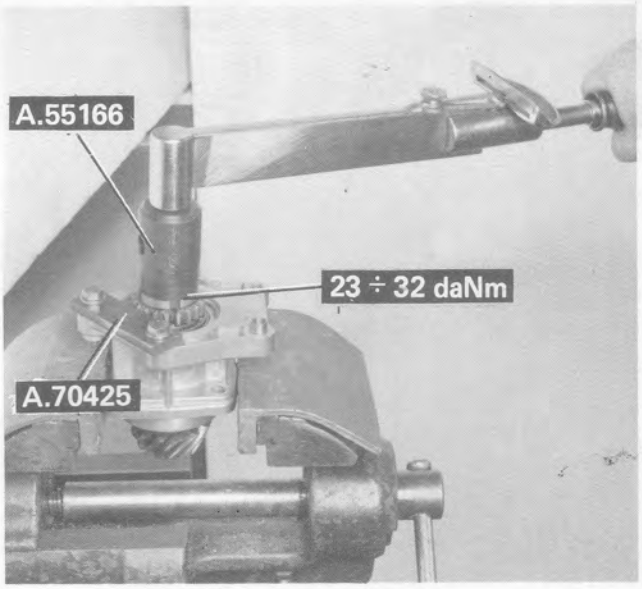

Fitting bevel pinion

The ring nut must be tightened to a torque of 23 - 32 daNm so as to produce a rolling torque of 0.08 - 0.12 daNm for the pinion. It must be remembered that with this type of differential which has a rubber spacer, the bevel pinion fixing nut must never be loosened without replacing the spacer.

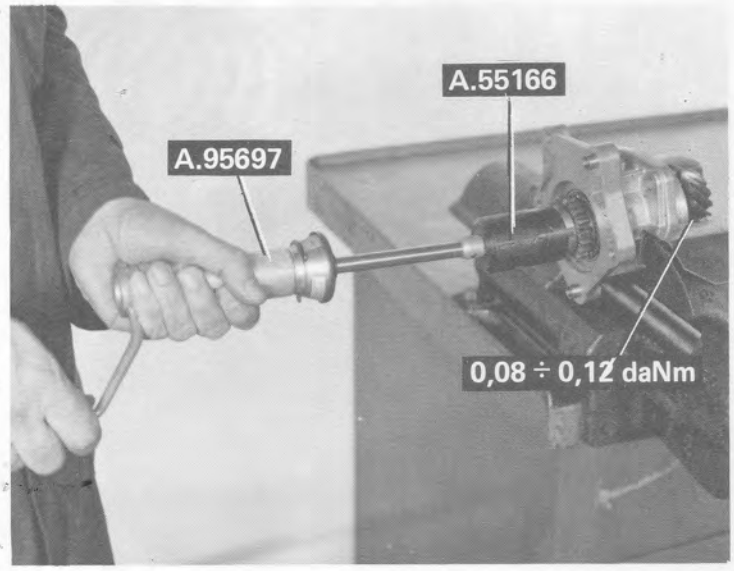

Checking bevel pinion rolling torque

21-27.

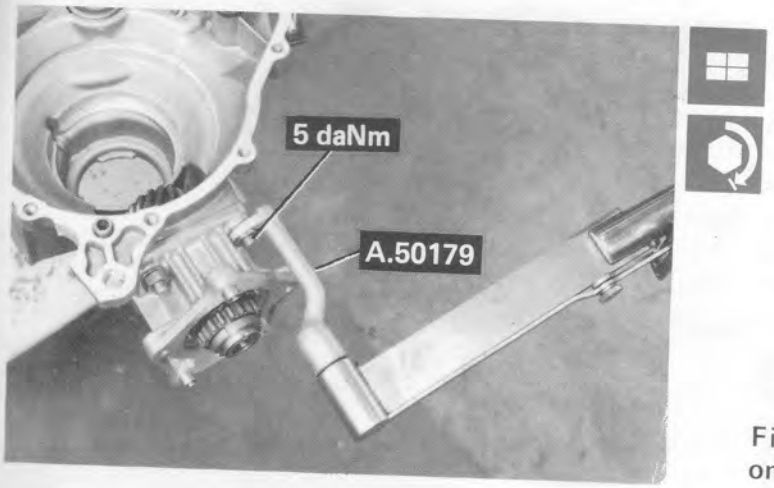

Fitting bevel pinion complete with mounting on gearbox - differential casing

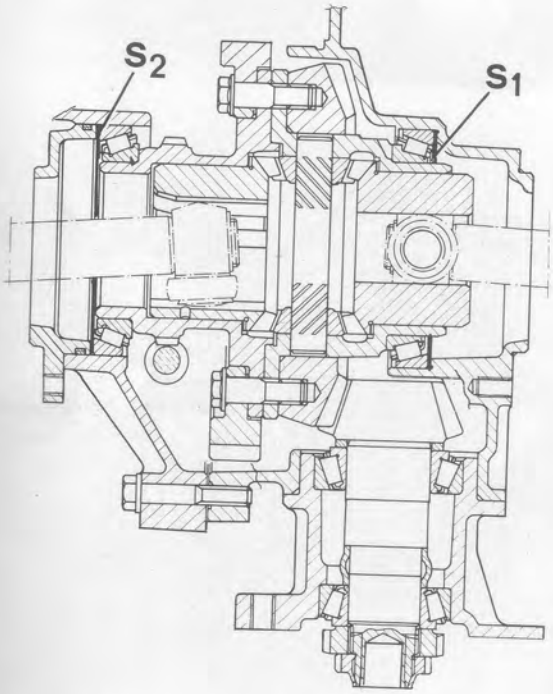

FITTING AND ADJUSTING DIFFERENTIAL UNIT

Fitting and adjusting differential unit

The thickness of adjustment shims **S1** and **S2** must be determined.
The distance **S1** establishes the position of the crown wheel in relation to the bevel pinion and therefore determines the clearance between the teeth which must be 0.08 - 0.15 mm.
The distance **S2** defines the differential unit bearing pre-loading which must be 350 daNm.

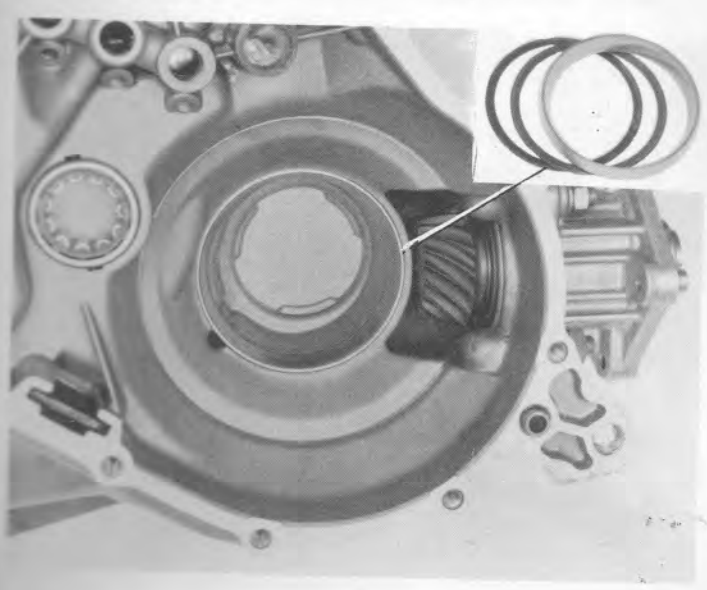

SELECTING S1 SHIMS

– Select one (or more) shims which is definite ly larger than required and fit it (them) together with the beraring outer race.

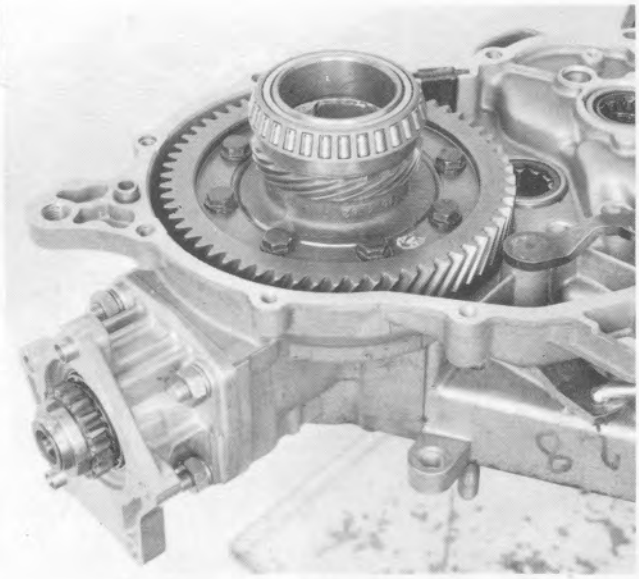

- Fit the complete differential unit.

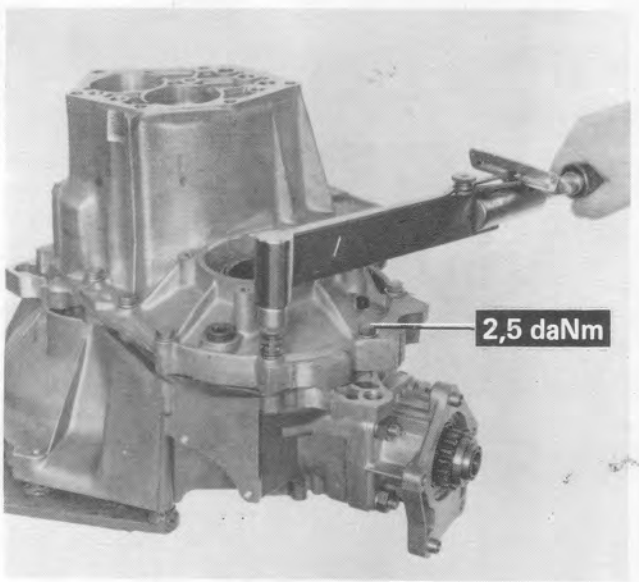

- Position the seal on the differential casing and fit the gearbox casing, tightening the bolts and nuts to a torque of 2.5 daNm.

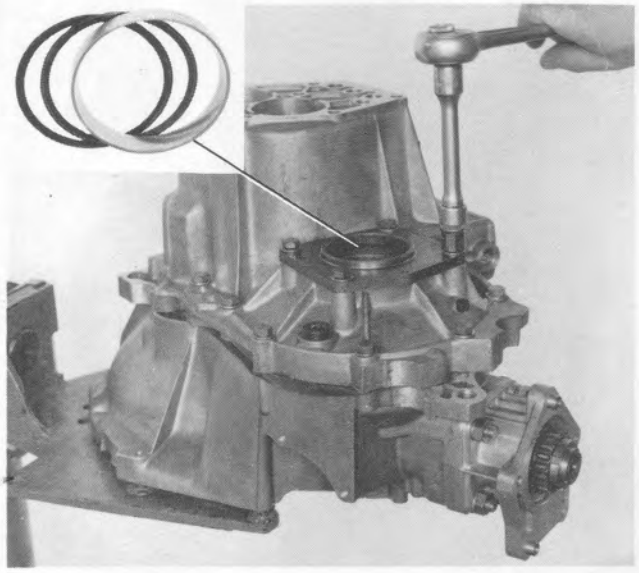

- Fit the bearing outer race, too many shims and the relative support.
- Tighten the support bolts and rotate the crown wheel through several revolutions so that the unit is well bedded in. Then remove the support and the adjustment shims.

21-27.

DETERMINING S2 SHIMS

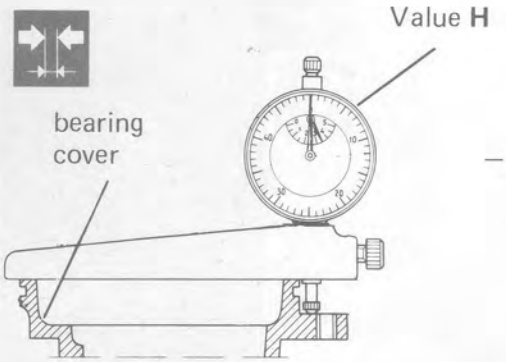

– Read off value "**H**" on the dial gauge corresponding to the depth of the bearing cover.
If possible, zero the dial gauge.

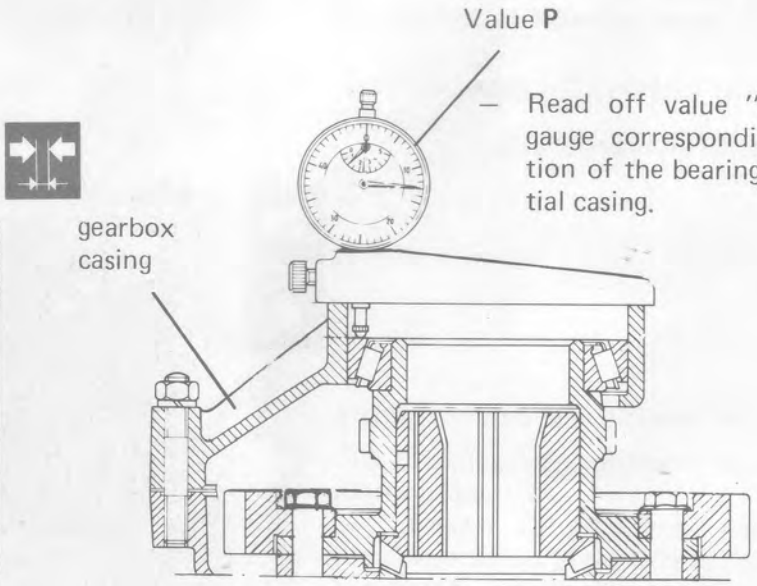

– Read off value "**P**" on the dial gauge corresponding to the position of the bearing in the differential casing.

Work out the difference between the values measured and add 0.12 mm (corresponding to the interference fit recommended for the bearings in the internal differential casing).

$$S2 = H - P + 0{,}12$$

The shims are available in the following sizes: 0.40 - 0.50 - 0.60 - 0.70 - 0.80 - 0.90 - 1.00 mm.

NOTE *After having determined the exact value for the thickness of the shims, get as close as possible to this thickness using the available shims.*
If the value obtained by this method does not correspond to the size of one of the shims or to two together, fit the nearest larger size shim.

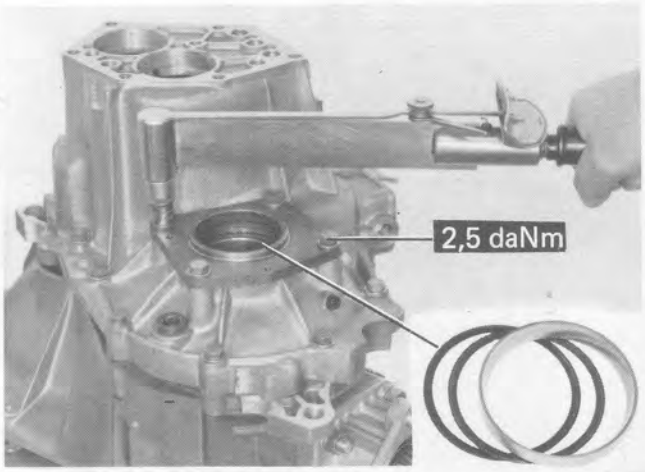

– Fit the shims and tighten the bearing cover bolts to a torque of 2.5 daNm.

CHECKING CROWN WHEEL – PINION CLEARANCE

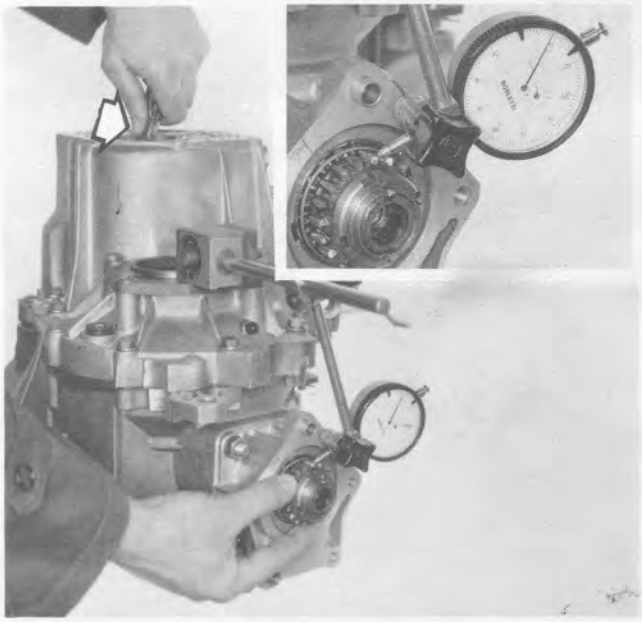

– Using a magnetic base dial gauge positioned as in the diagram, check the circumferential clearance between the pinion teeth and the crown wheel which should be between 0.08 and 0.15 mm. In order to do this, stop the rotation of the crown wheel using a screwdriver between the teeth and the differential casing (see arrow).

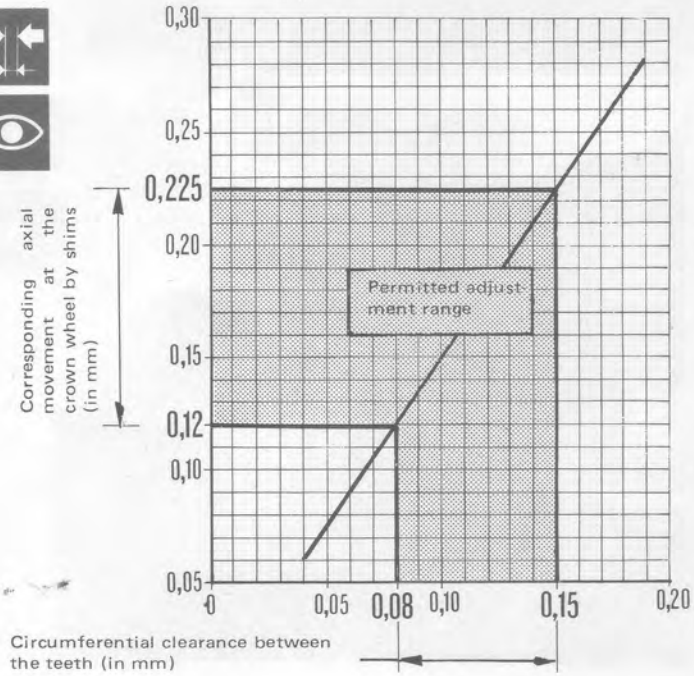

– If the clearance does not correspond with the value given, use the diagram to measure the thickness to be removed or added to S1 thus determining the exact value of S1.
Shims are available in the following sizes: 0.40 - 0.50 - 0.60 - 0.70 - 0.80 - 0.90 - 1.00 mm.

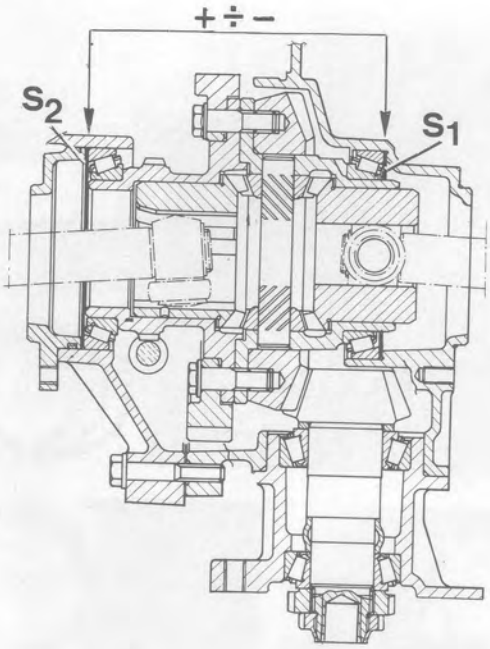

FINAL POSITIONING OF UNIT

Determining thickness **S2**
Make a note of the amount removed (or added) to obtain **S1** and add it to (or remove it from) the **S2** shims provisionally determined previously so as to always maintain the same bearing pre-loading.

NOTE *The calculations must be based on the value of the actual shims since they have different diameters.*

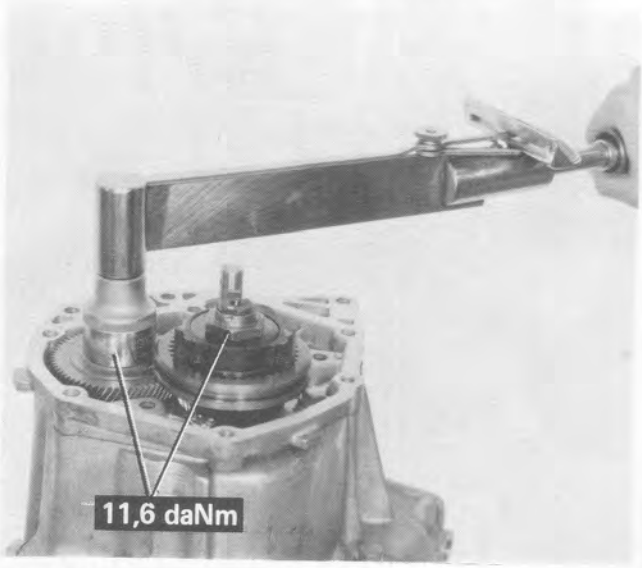

FITTING THE GEARBOX

Tighten the 5th speed gear ring nuts to a torque of 11.6 daNm and stake them using pliers A.74140/1/5.
Fit the gearbox components in the reverse order to their removal.

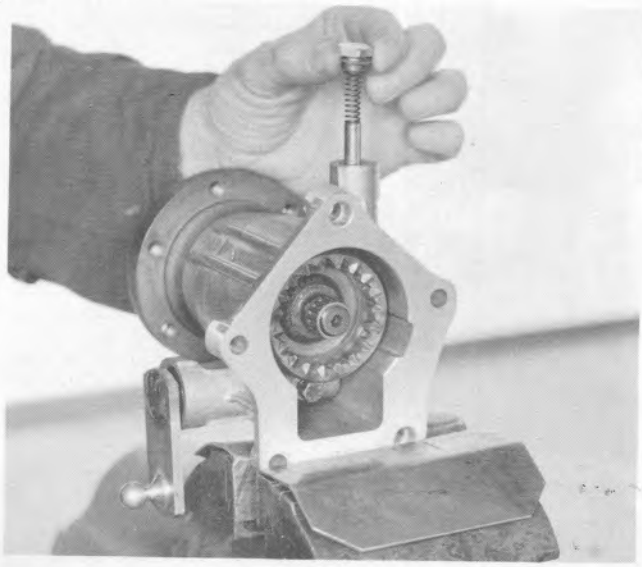

REAR TRANSMISSION CLUTCH

Removing-refitting rear transmission clutch selector pawl.

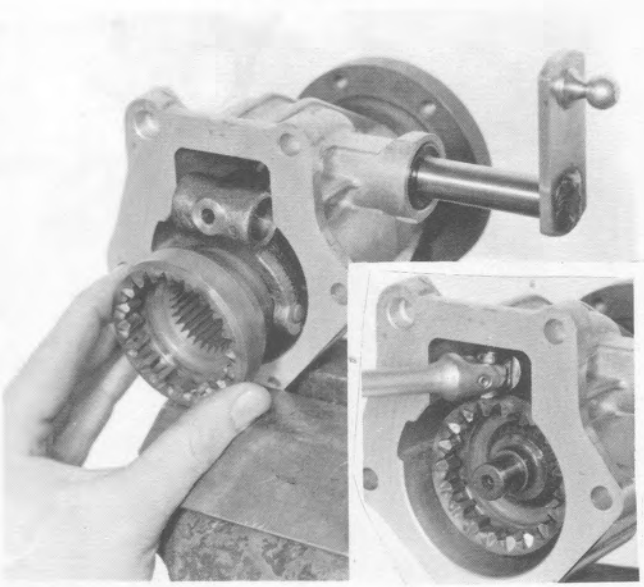

Removing-refitting rear transmission clutch sleeve

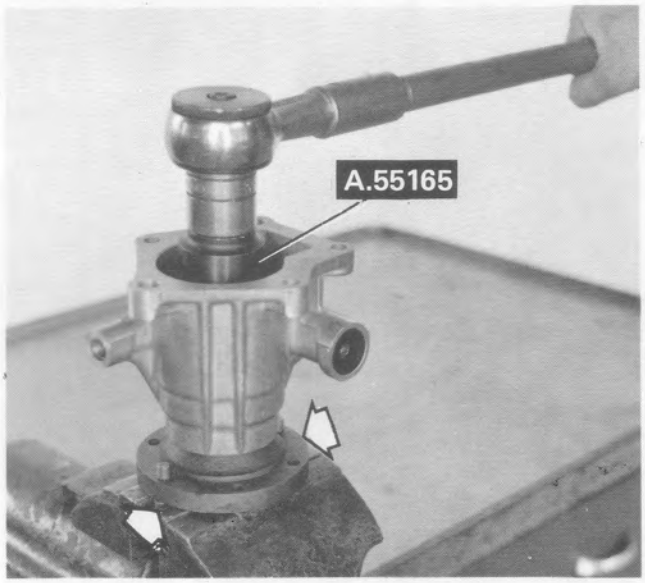

Removing ring nut fixing power output shaft for rear drive

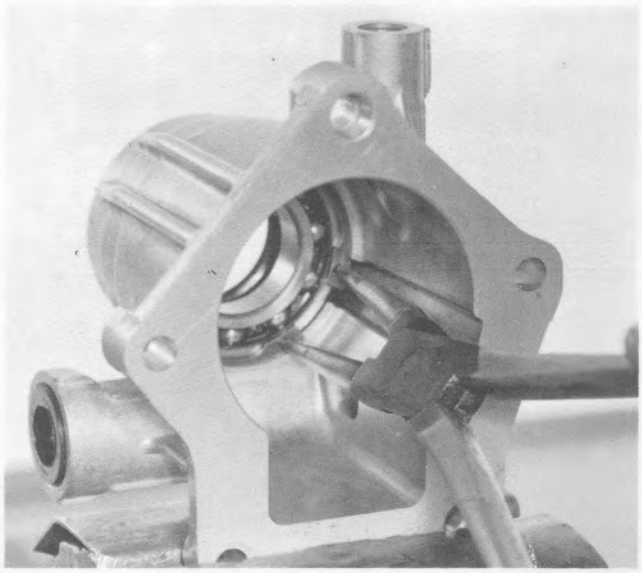

Removing-refitting power output shaft bearing retaining ring

21-27.

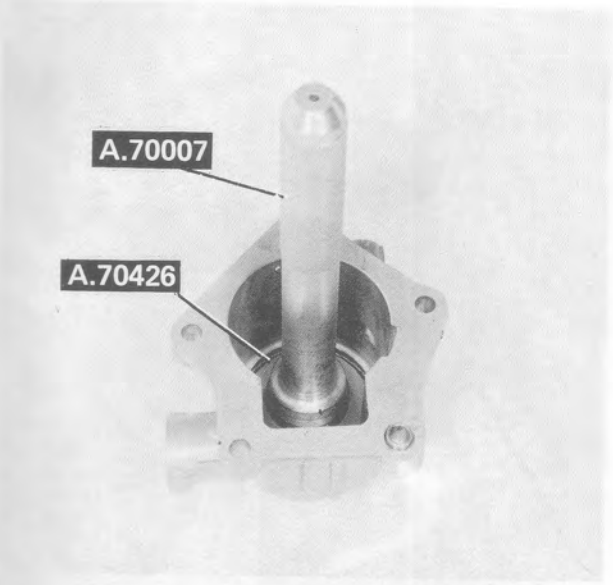

Fitting power output shaft bearing.

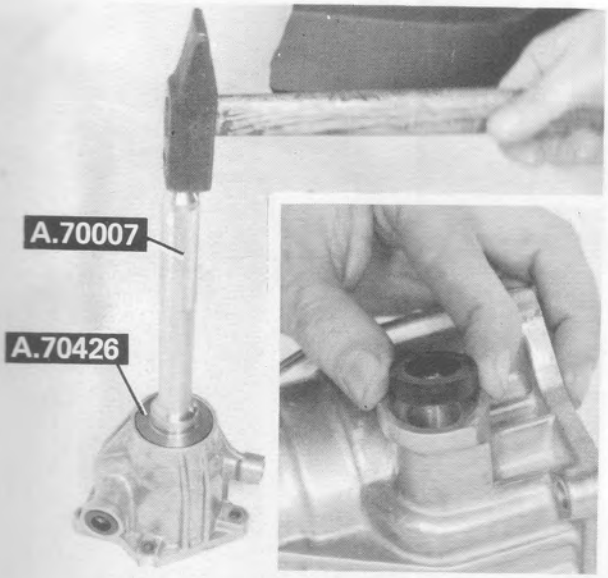

Fitting seal for power output shaft and rear transmission clutch lever spindle

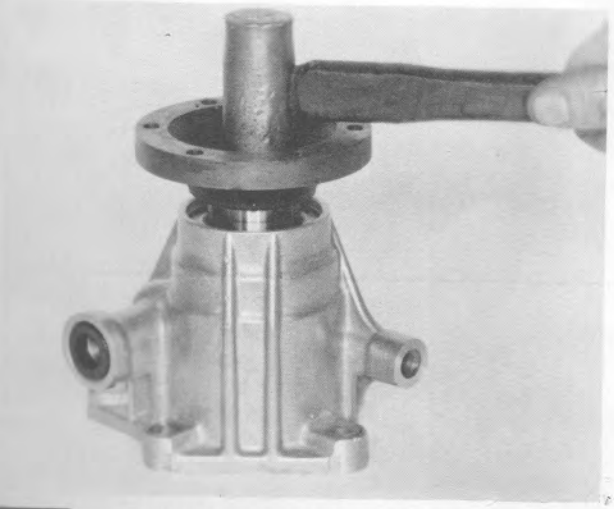

Fitting power output shaft

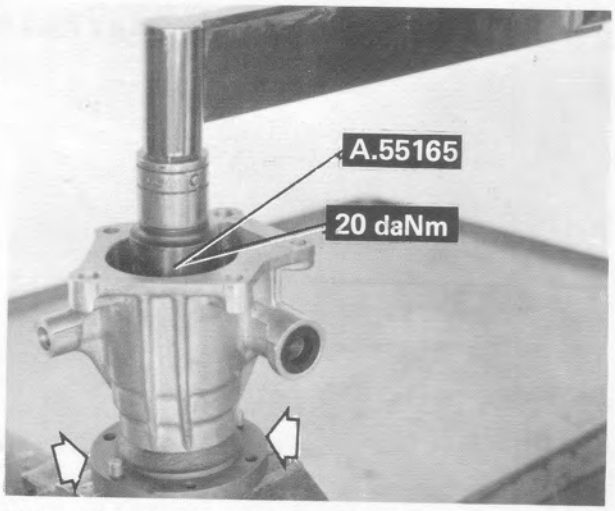

Tightening ring nut fixing rear transmission power output shaft to torque

Removing-refitting front coupling from power unit

Removing-refitting rear joint from rear axle

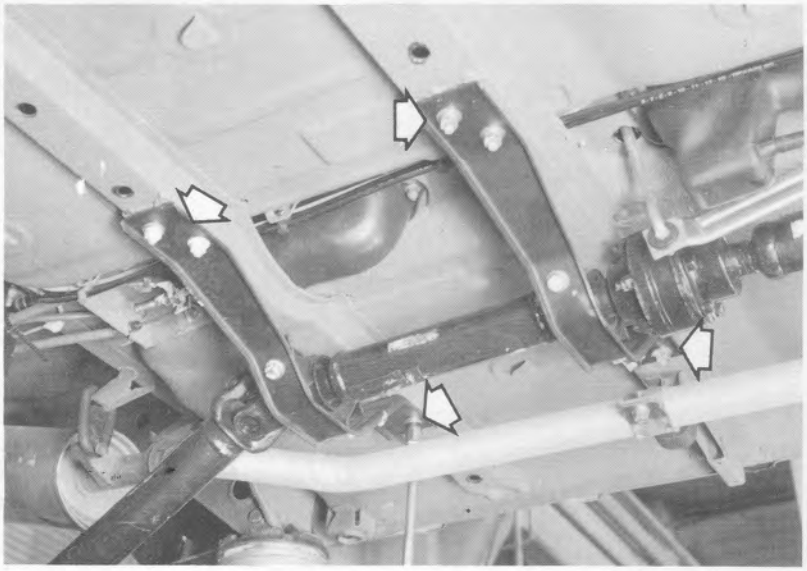

Removing-refitting propeller shaft from bodyshell

24.

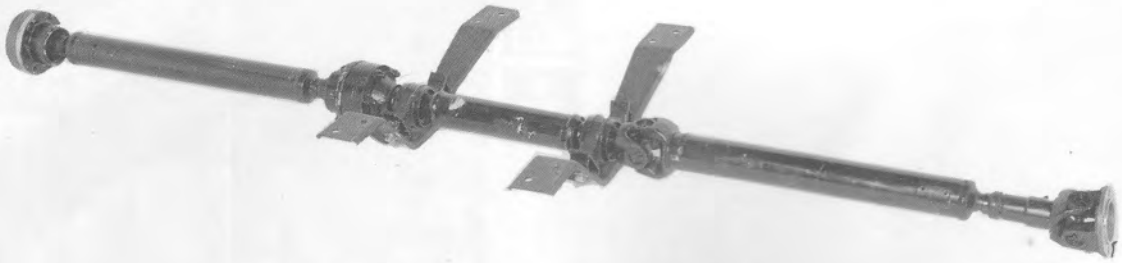

Propeller shaft complete with mountings

REMOVING

It is advisable to mark the position of the components before removing them.

Removing universal joint spider using drift A.70423. The inset shows the removal of the circlips using round pliers.

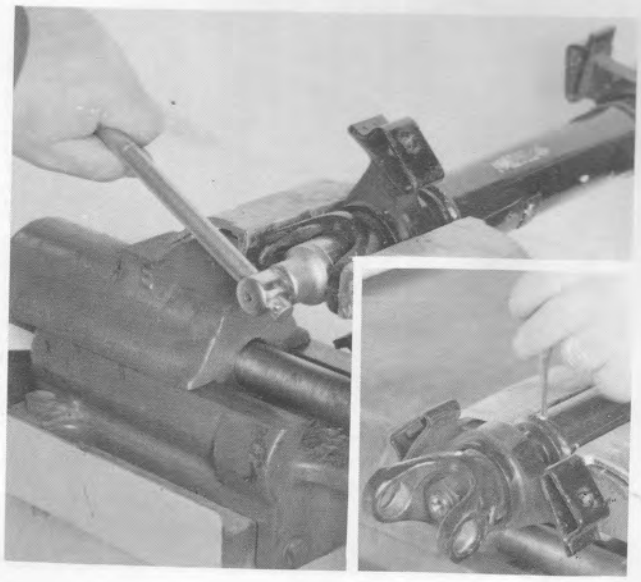

Removing nut retaining sleeve to fork from front propeller shaft tail piece

The inset shows the reference marks.

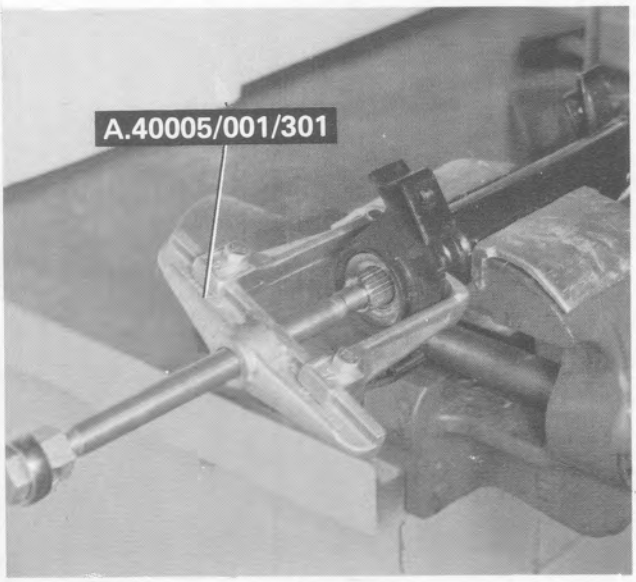

Removing flexible mounting from central propeller shaft

FITTING

When fitting, make sure that the reference marks on the components which have not been replaced coincide.

Fitting flexible mounting (complete with bearing) on central shaft using a drift

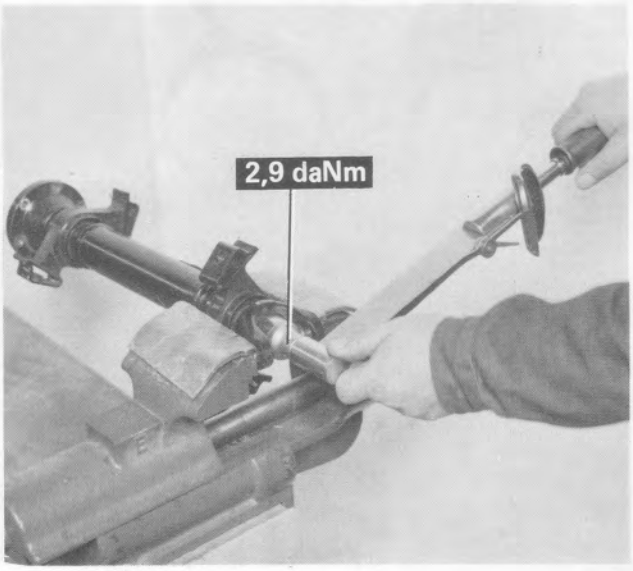

Tightening nut fixing sleeve to fork to torque

Stake the nut.

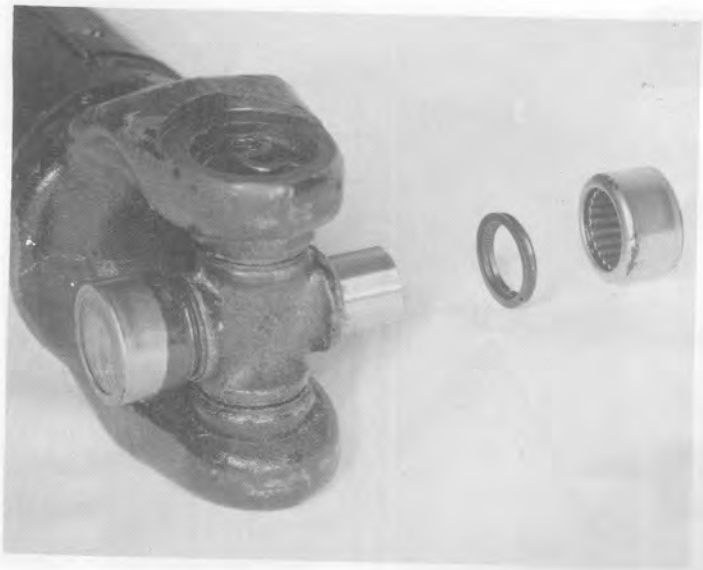

Universal joint

Check the condition of the spider and the roller bearings and if there is interference or excessive clearance, replace the complete spider.

NOTE *Universal joint spiders are available as spares complete with roller bearings.*

Lubricate with Tutela MR2.

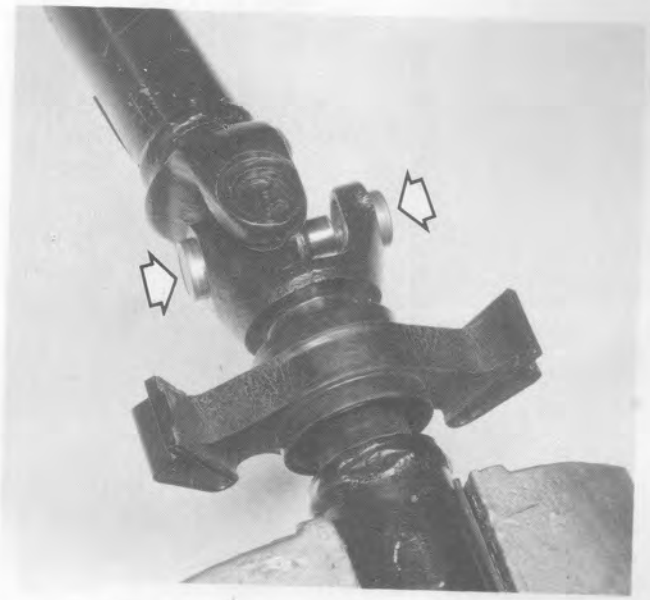

Fitting universal joint

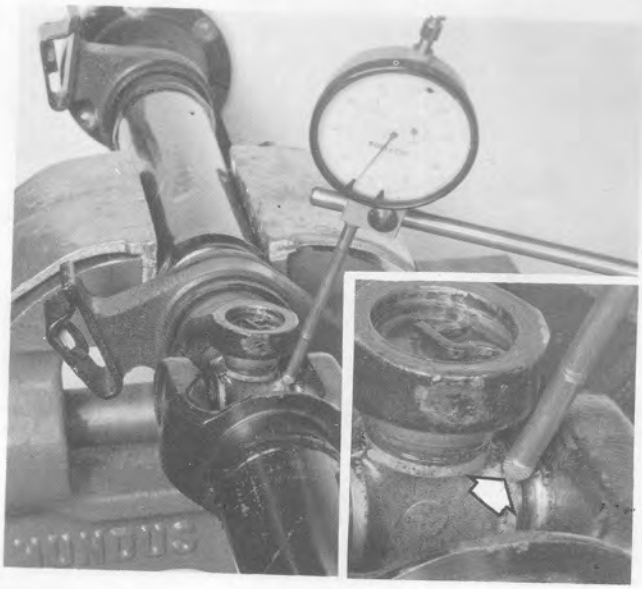

Checking spider clearance

When overhauling a universal joint check the clearance between the spider pins and the roller bearings.
Fix the spider in a vice and measure the joint clearance (using dial gauge **A.95684**) **which should be between 0.01 and 0.04 mm.**
If the clearance is greater than the one given, it is necessary to replace the rubber safety shims which are available as spares in the following sizes: **1.50 - 1.53 - 1.56 - 1.59 - 1.62 - 1.65 mm.**

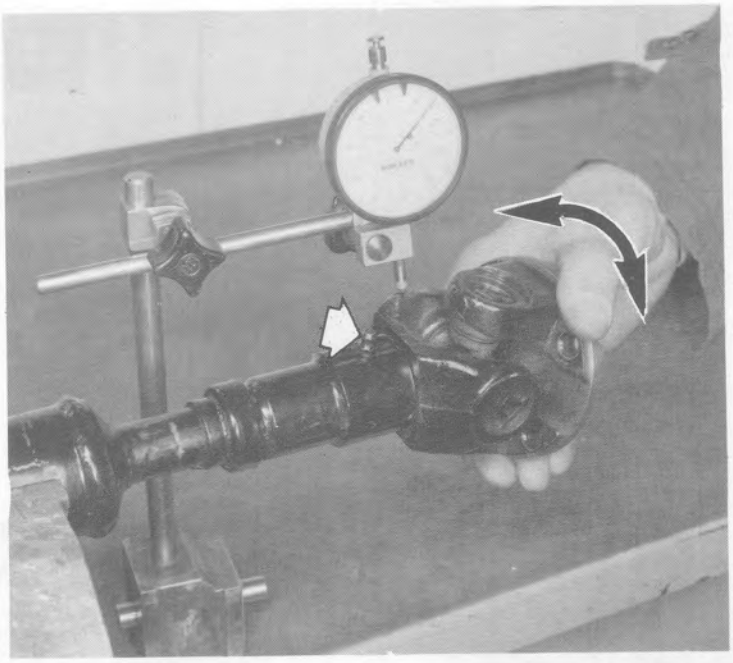

Checking the clearance between the sleeve splines and the propeller shaft tail piece using a centesimal dial gauge. The clearance should be 0.175 – 0.350 mm.

Lubricate the parts concerned as shown using Tutela JOTA 1

REMOVING CONSTANT VELOCITY JOINTS

Removing constant velocity joint from central shaft

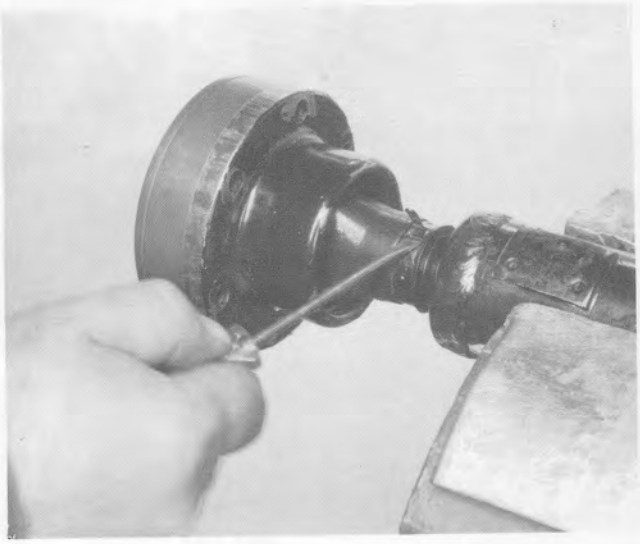

Removing band retaining constant velocity joint protective boot

(should only be removed it the rubber boot is being replaced)

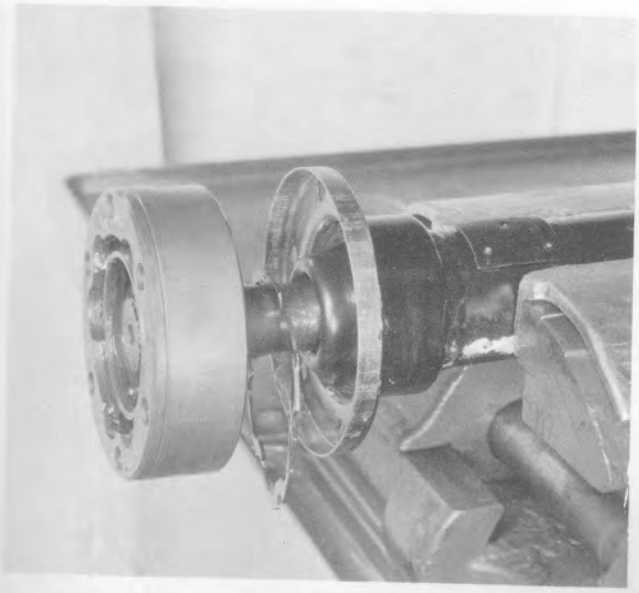

Removing boot from joint

Move the boot flange towards the shaft

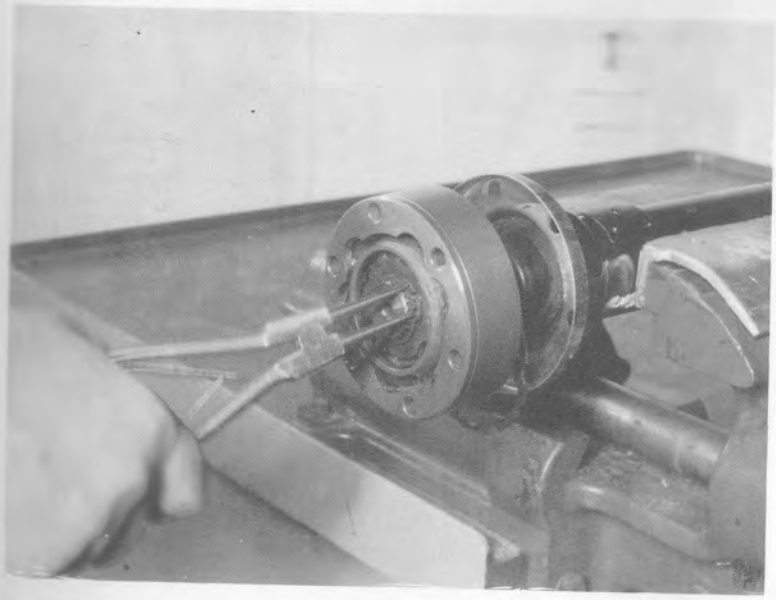

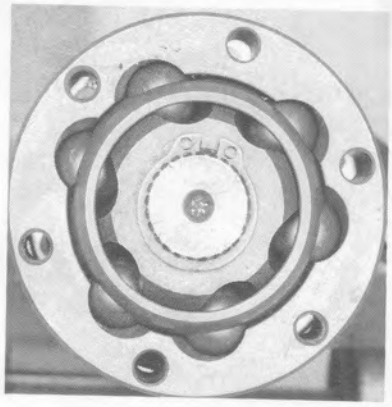

Removing constant velocity joint circlip using appropriate pliers.

Removing constant velocity joint from shaft

FITTING

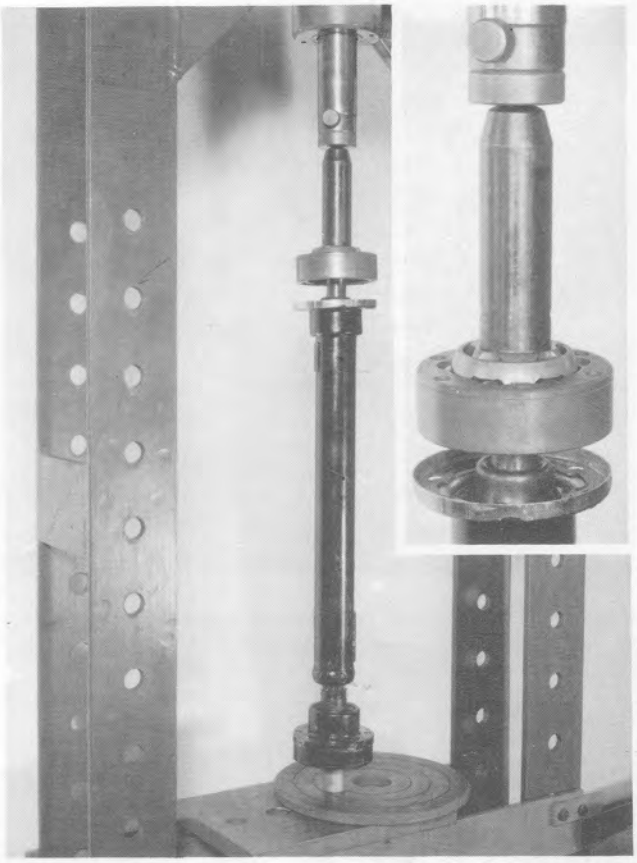

Fitting constant velocity joint on front shaft

Before fitting the joint, fit the rubber spacer.

Carefully lubricate the constant velocity joint cavities with 0.050 kg of Tutela MRM2 grease.

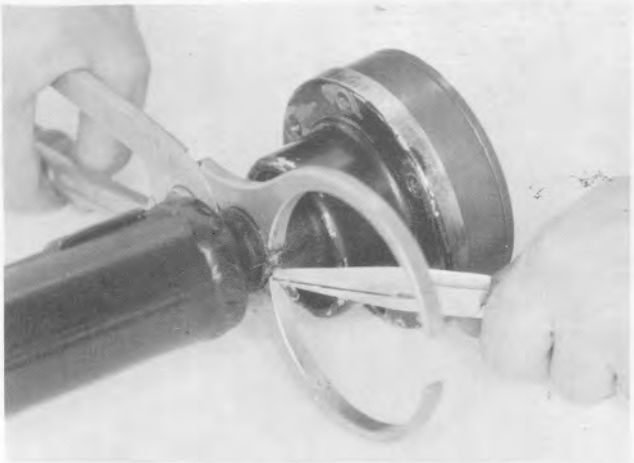

Fitting rubber boot retaining clip

(if it has been replaced)

CHECKING SHAFT ALIGNMENT

Any straightening operations to the 3 shafts should be carried out on the press, if possible using gradually increasing force.

Checking front shaft alignment

See overleaf for checking the shafts.

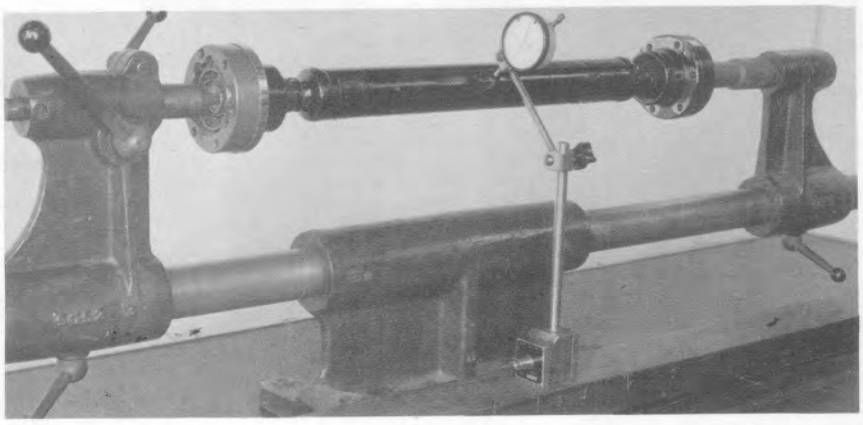

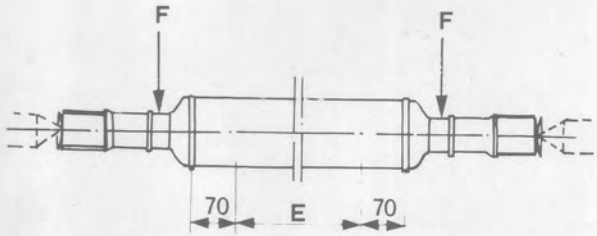

Front shaft

Support the complete shaft on two vee blocks and check that with the dial gauge resting:

- on section E the variations are not ⩾ 0.35 mm
- on section F the variations are not ⩾ 0.15 mm

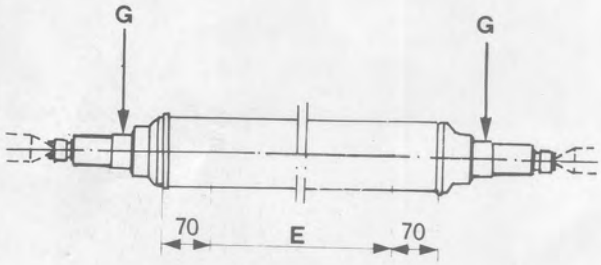

Intermediate shaft

Support the complete shaft on two and check that with the dial gauge resting:

- on section E the variations are not ⩾ 0.35 mm
- on section G the variations are not ⩾ 0.15 mm

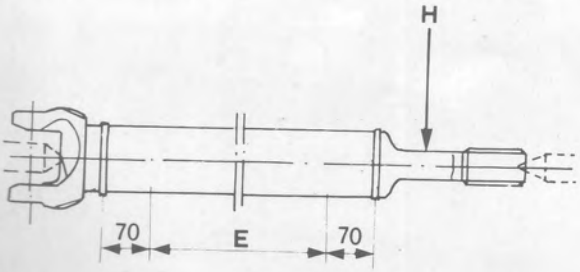

Rear shaft

Support the complete shaft on two and check that with the dial gauge resting:

- on section E the variations are not ⩾ 0.35 mm
- on section H the variations are not ⩾ 0.15 mm

Position the vehicle on the lift.
Remove the rear wheels and remove the propeller shaft from the differential unit.

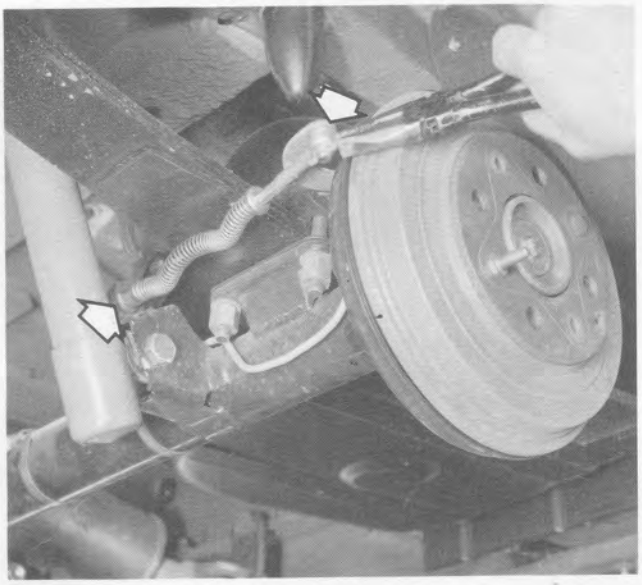

Removing-refitting handbrake control cable

There should not be any signs of hardening or wear on the cable or it must be replaced.

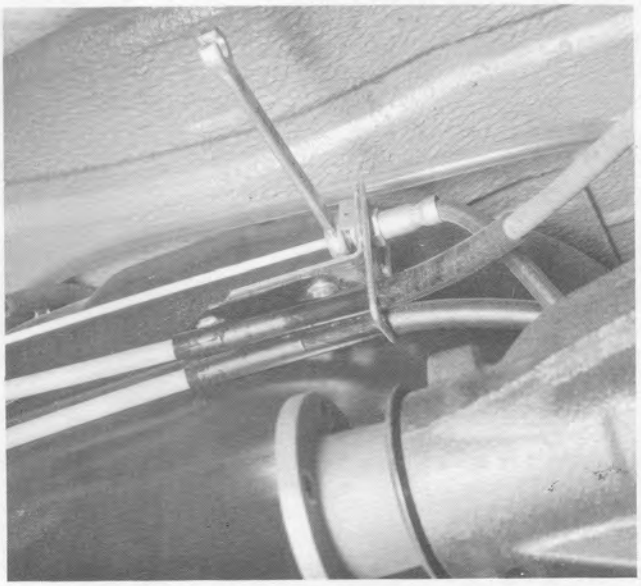

Removing-refitting rear hydraulic brakes rubber tube

Removing-refitting shock absorber from rear axle

NOTE *Always replace the rubber bushes before fitting*

27.

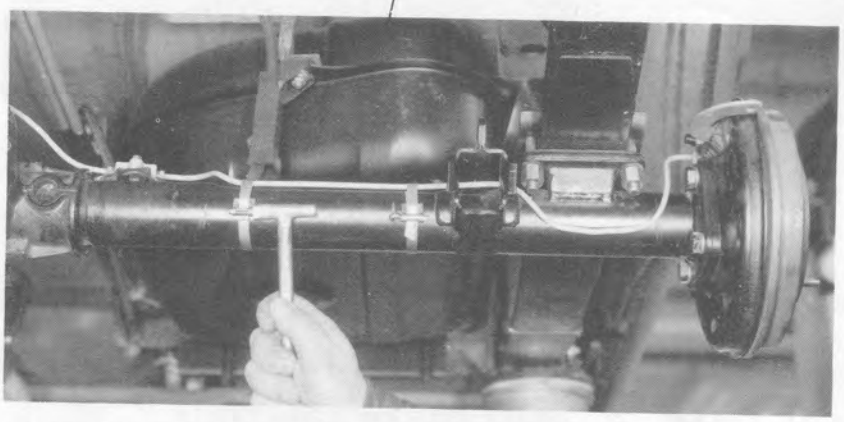

Removing rear axle

- Remove the rear brake pipes.
- Position two stands under the rear axle and lower the vehicle as shown in the diagram.
- Release the rear axle from the leaf springs.
- Raise the vehicle and remove the rear axle.

NOTE *To refit, simply reverse the order of the operations carried out for its removal.*

Tightening nuts fixing rear axle to leaf springs to torque

In addition:

Bleed rear brakes.

REMOVING – REFITTING

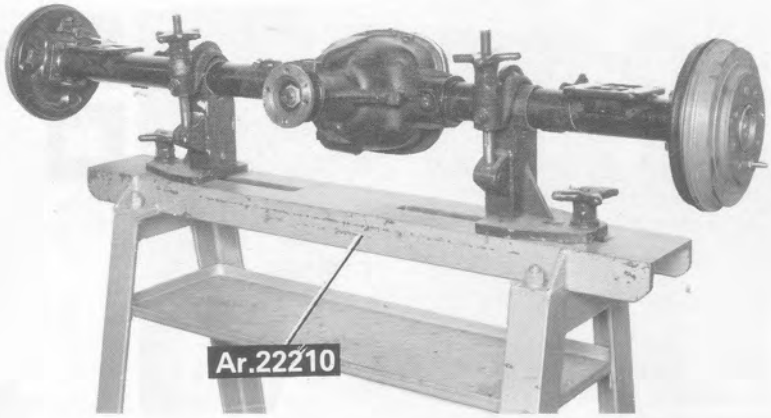

Rear axle on stand for overhauling

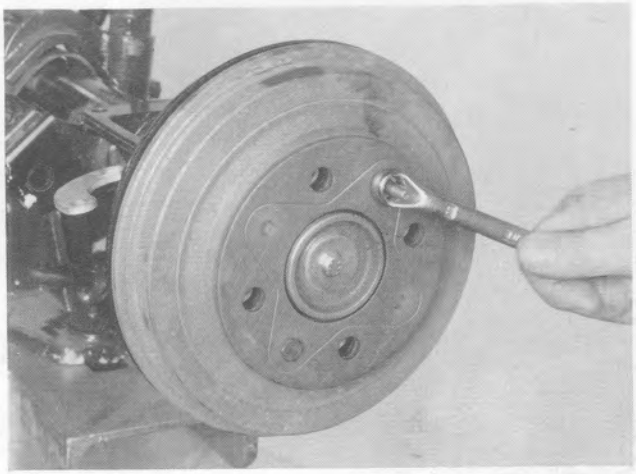

Removing-refitting bolt fixing drive shaft to wheel hub

Remove the brake drum as shown in the top diagram.
Before refitting the brake drum, remove any traces of rust on the contact surfaces.

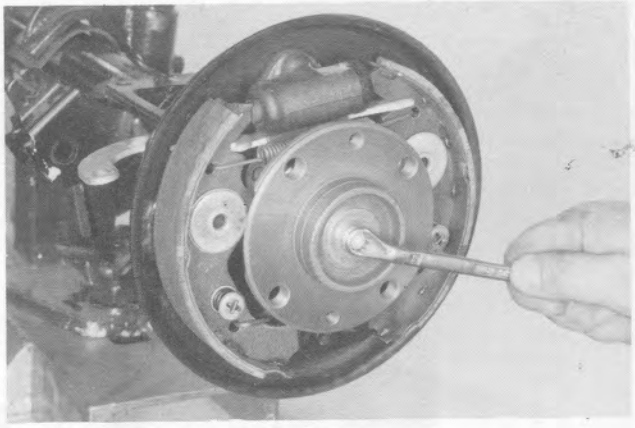

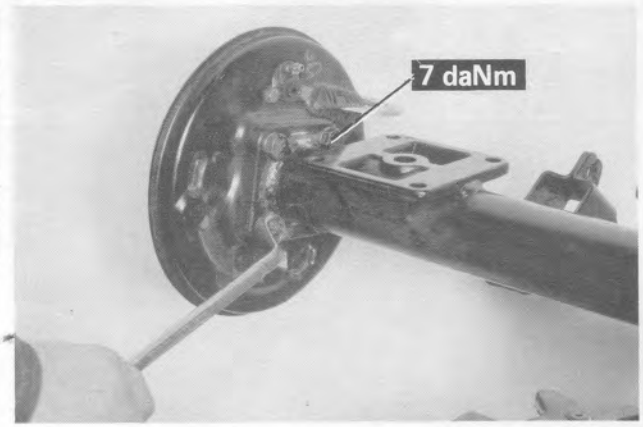

Removing-refitting hub complete with bearing and brake back plate

When fitting tighten the fixing bolts to a torque of 7 daNm.

27.

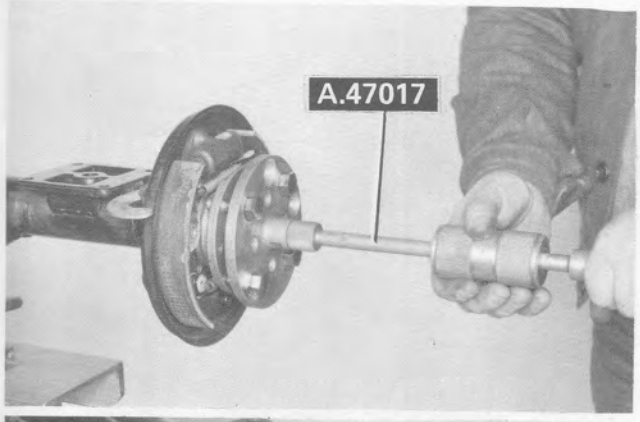

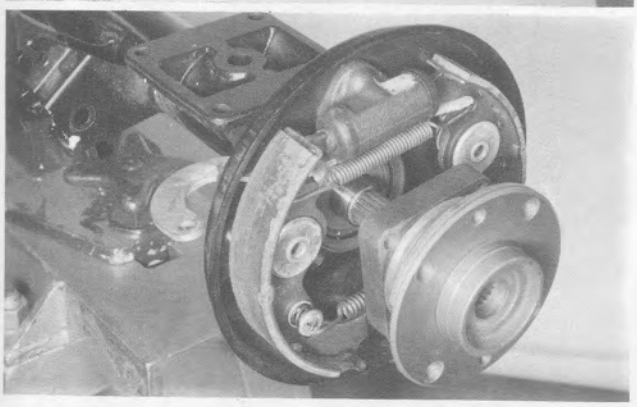

Removing-refitting wheel hub complete with bearings

The operation also allows the removal of the brake back plate.
If the wheel bearings are replaced due to noisiness or excess clearance, it is also necessary to replace the hub and attachment flange as they are supplied in one piece.

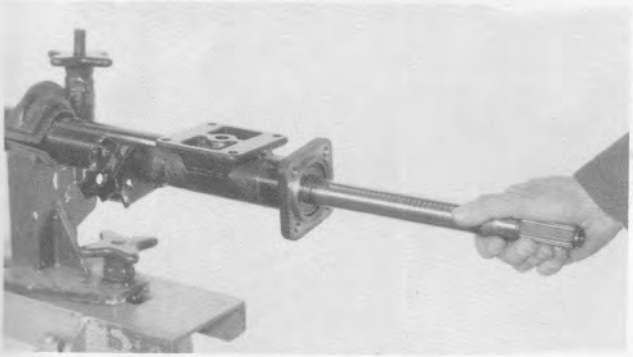

Removing-refitting drive shaft

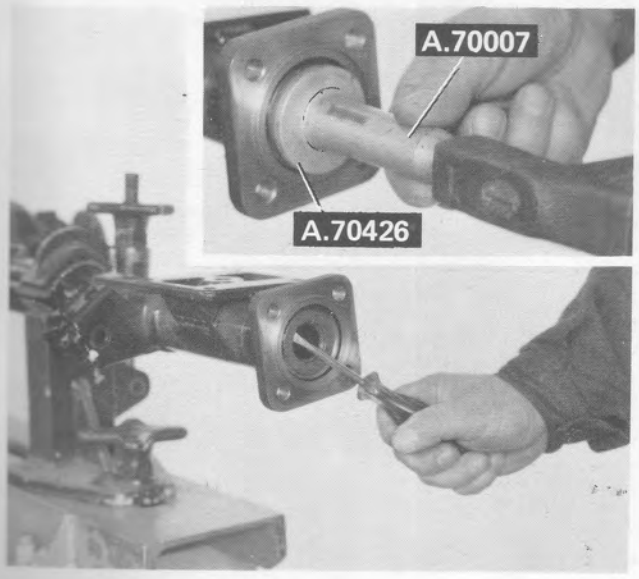

Replacing drive shaft seal

REMOVAL FROM AXLE

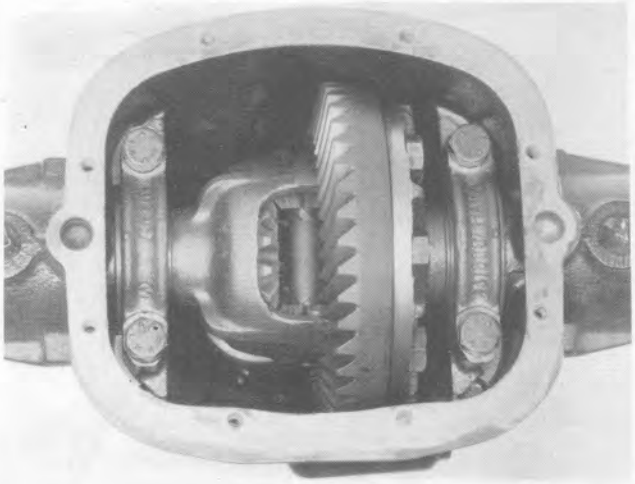

View of differential unit with rear cover removed

Fitting tool for adjusting bearing preloading by acting on differential casing supports

- Fit tool **A.95753** with the lugs in the special holes in the support, **taking care that the tension lever is open as illustrated in the diagram.**
- Fix tool **A.95753** with the differential cover bolts.
- Tighten the tools' side rods to a torque not greater than 0.98 daNm.
- Loosen the bolts fixing the bearing retainer caps.

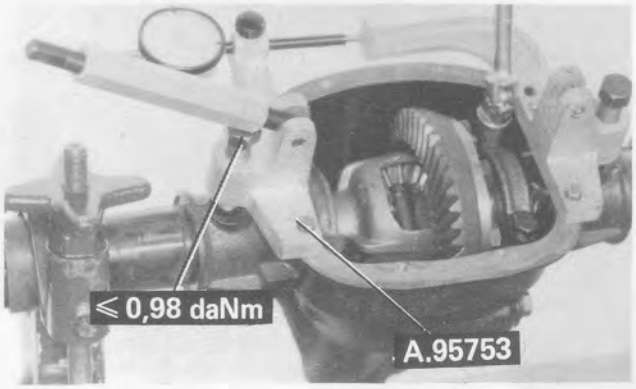

Adjusting bearing pre-loading by acting on differential casing supports

- Close the tension lever via the right bolt fitted with a knurled handle.
- Zero the dial gauge.
- Spread the differential support **0.6 – 0.8 mm**, turning the hexagonal sleeve in the direction shown by the arrow.

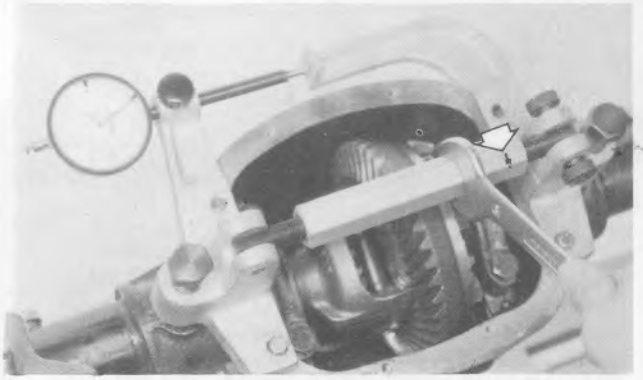

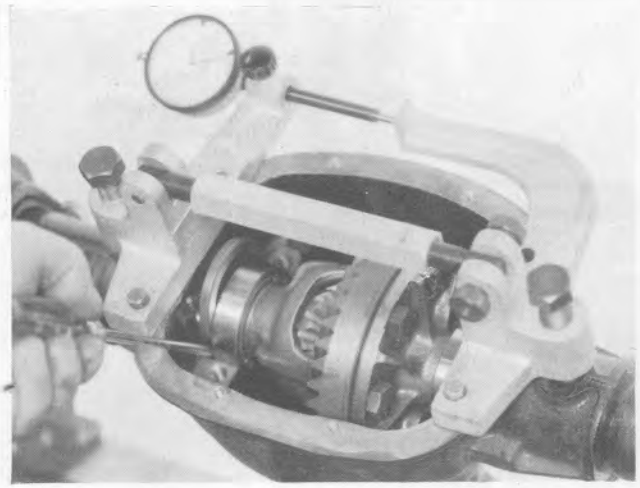

Removing differential unit

- Remove the bearing pre-loading shims.
- Loosen the tension lever on tool **A.95753** and remove it from the axle.
- Remove the differential unit.

27.

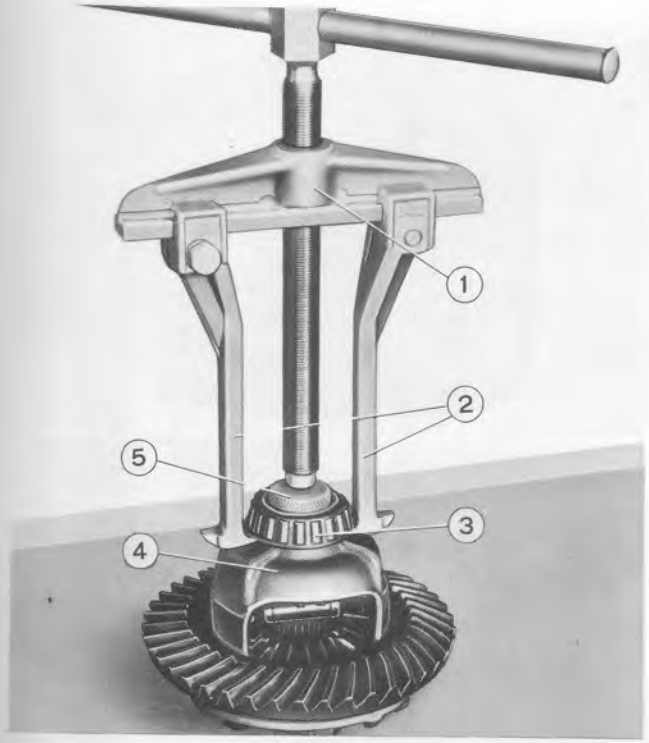

REMOVING, CHECKING, REFITTING

Before checking the various components, wash them carefully.
Check that the teeth work over the entire surface. If excessive wear is encountered, replace the relevant parts; if the teeth are irregular, find out why. If some of the gears have chipped teeth, they must be replaced and the gears they are coupled with must also be checked for damage.

Removing differential internal casing bearings inner tracks.

1. Universal extractor **A.40005/001**.
2. Brackets **A.40005/302**.
3. Differential internal casing bearing inner track.
4. Differential internal casing.
5. Tool **A.45028**.

Examine the internal casing roller bearings. Replace them if there is any doubt whatsoever as to their efficiency as any malfunction in the bearings can cause noisiness or seizing of the gears.

Removing bolts fixing crown wheel to differential internal casing.

1. Differential internal casing.
2. Crown wheel.

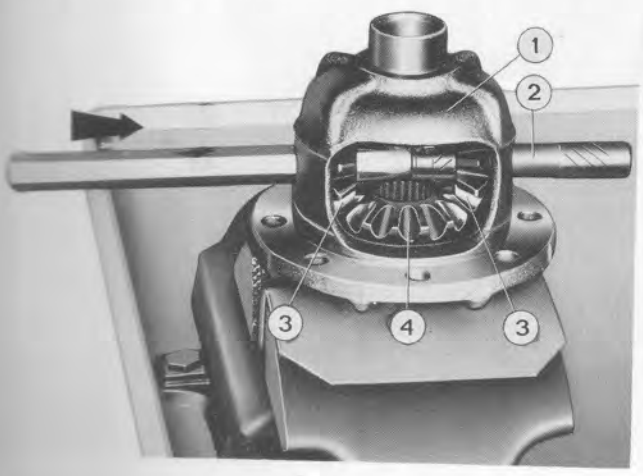

Removing satellite carrier spindle from differential internal casing using a drift.

1. Differential internal casing.
2. Satellite gear pin.
3. Satellite gears.
4. Planet gear.

Check that there are no distortions or cracks on the support and the differential internal casing or they must be replaced.
Check the surfaces of the planet gear support rings and, if necessary, replace them.

Fitting satellite gears in differential internal casing.

1. Differential internal casing.
2. Planet gears.
3. Satellite gears.

To fit the satellite gears in the differential internal casing, position them as shown in the diagram and push them towards their housing making them rotate around the planet gears.

The rolling torque for these gears is 1.0 – 6.8 daNm.
If this is not the case, replace the planet gear support rings (which are supplied in sizes ranging from 2.75 to 3.25 mm at 0.05 mm intervals).

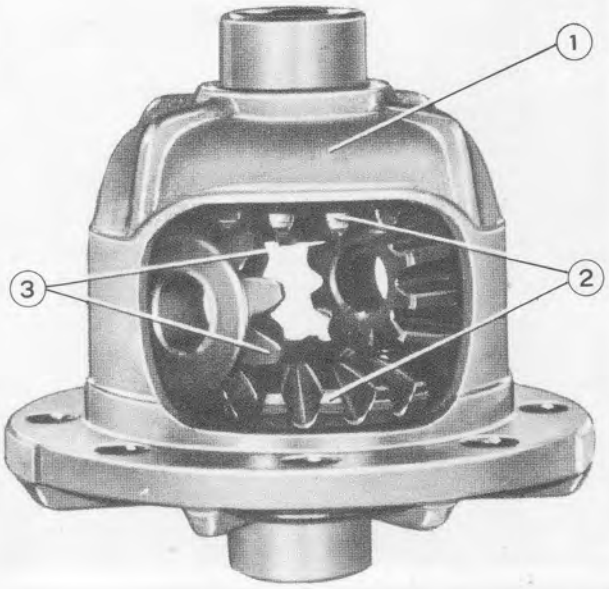

Tightening bolts fixing crown wheel to differential internal casing.

1. Differential internal casing.
2. Crown wheel.

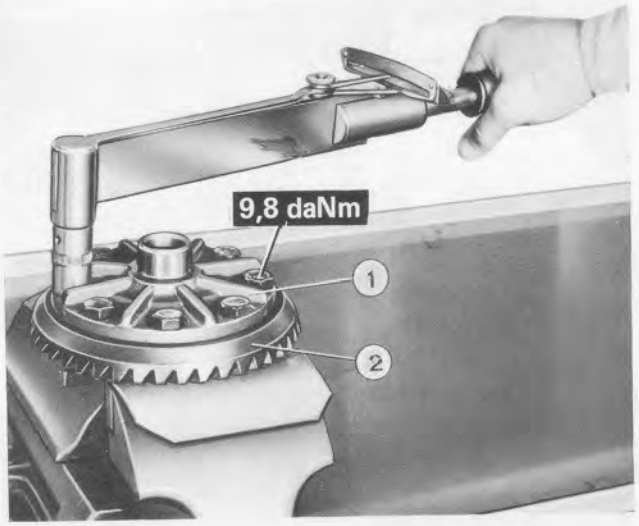

Fitting differential internal casing bearing inner trackss.

1. Drift **A.70152**.
2. Differential internal casing conical roller bearing inner track.
3. Differential internal casing.

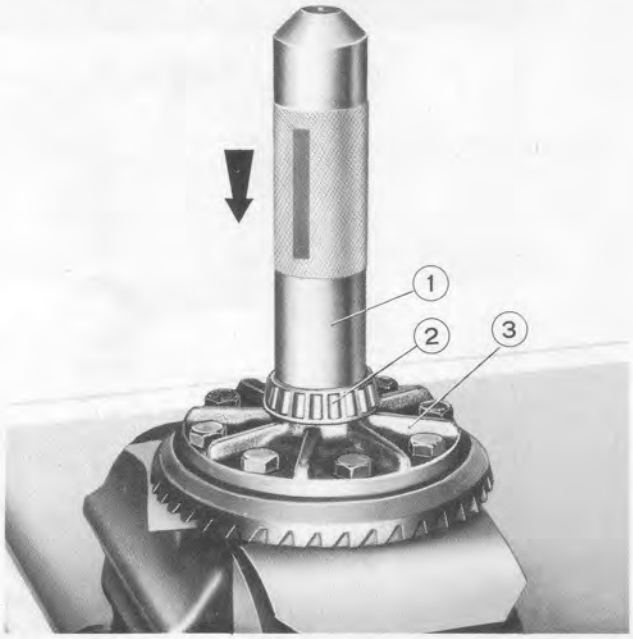

27.

REMOVING

Removing nut fixing sleeve to bevel pinion

Stop the pinion rotating using tool **A.70341/1/2**

Removing bevel pinion rear conical roller bearing inner track

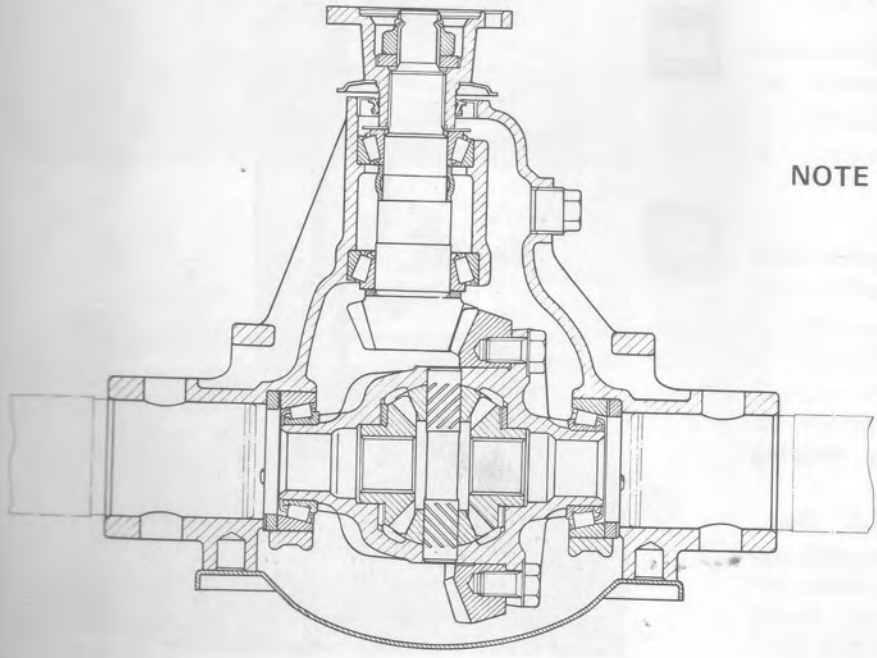

NOTE *The crown wheel and pinion are supplied as a matching pair; if one of them is damaged, both must be replaced.*

BEARING OUTER TRACKS

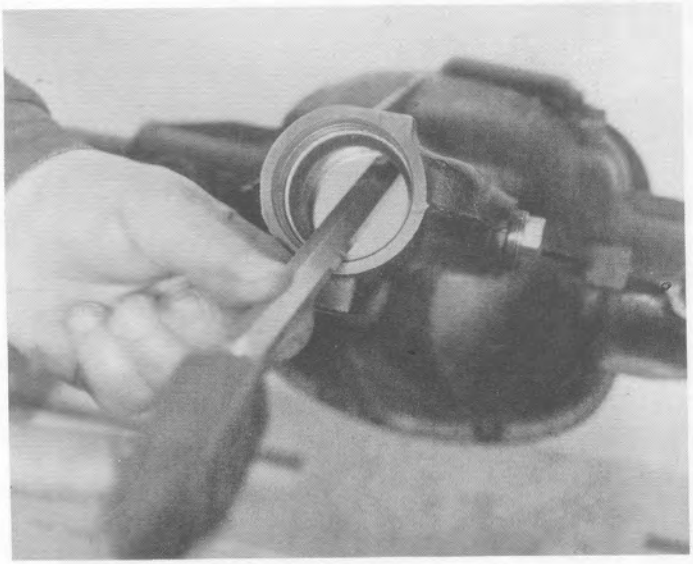

Removing bearing inner tracks from differential support using a brass drift

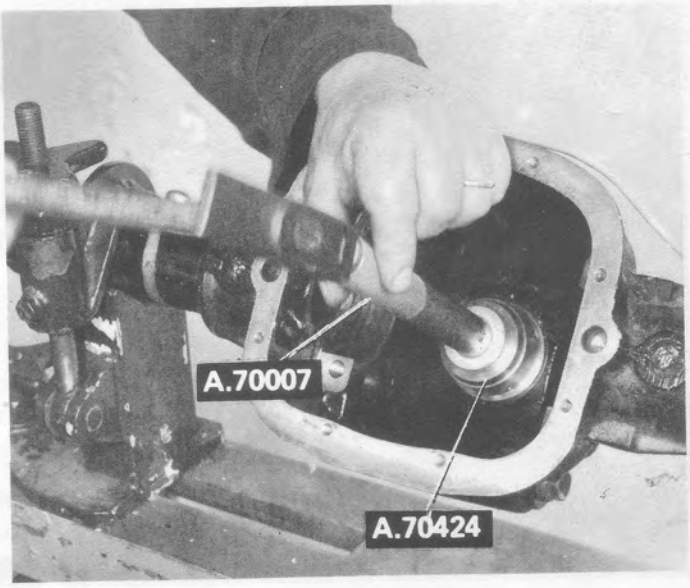

Fitting bevel pinion rear roller bearing outer track

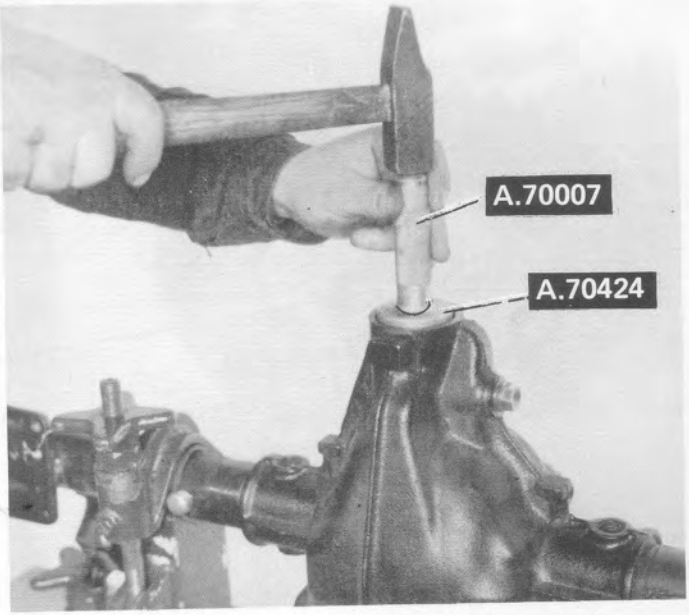

Fitting bevel pinion front roller bearing outer track

27.

ADJUSTING

Zeroing dial gauge A.95690 fitted on relevant support

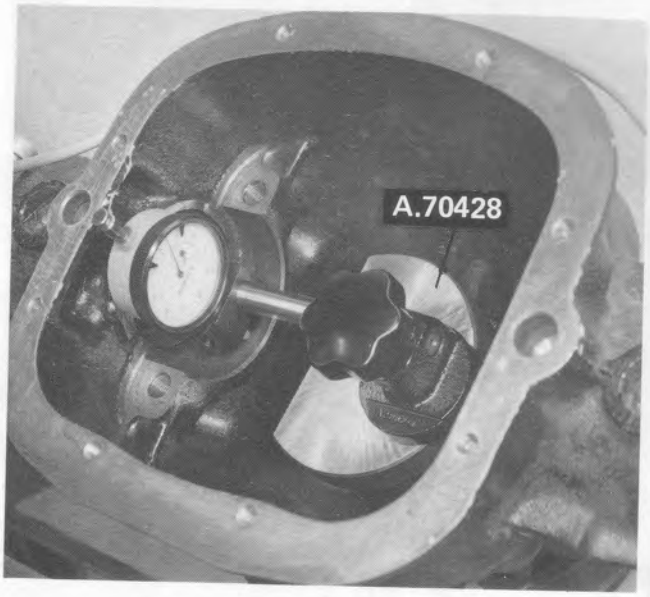

Measurements for determining thickness of shim for bevel pinion rear bearing

In order to fit the dummy pinion **A.70428** proceed as when fitting the bevel pinion omitting only the elastic spacer between the front and rear bearings.
Tighten the nut complete with washer fixing the tool, see that the bearings are properly bedded in and tighten fully.

Crown wheel and pinion reduction

Production and matching no.

1st case Centesimal value of the difference between the effective fitting distance and the nominal one.
(e.g. – 2,0, + 3)

2nd case Value of the effective fitting distance in millimetres.
(e.g. 80.95 – 81 – 81.02)
Always go back to the value as expressed in the first case, algebraically subtracting 81 from this measurement.
(e.g. 80.95 – 81 = – 0.05 mm = – 5 hundreths
81.02 – 81 = + 0.02 mm = + 2 hundreths)

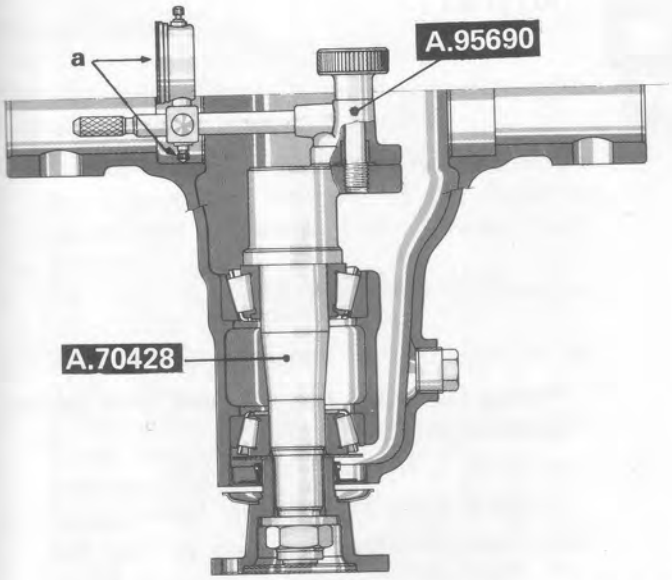

Diagram showing fitting of dummy pinion A.70428 and dial gauge A.95690 for determining thickness S of the depth of mesh shim for the bevel pinion rear bearing

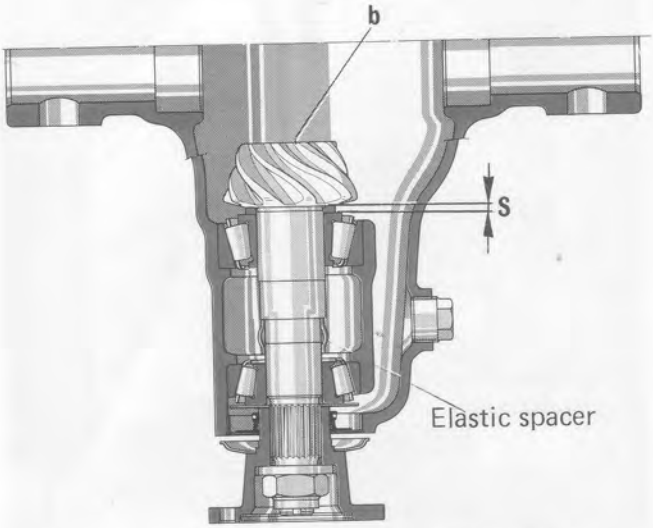

Diagram showing fitting of bevel pinion

The bevel pinion rear roller bearing support ring is available as spares in sizes ranging from **2.55 to 3.35 mm** in grades of **0.05 mm**

METHOD FOR DETERMINING THICKNESS OF DEPTH OF MESH SHIM FOR BEVEL PINION REAR BEARING

If "a" is the value shown on the dial gauge and "b" that given by the Factory on the bevel pinion, then the thickness "S" of the support ring to be fitted is determined using the following formula:

$$S = a - (+b) = a - b$$

or $$S = a - (-b) = a + b$$

In other words:

- If the number marked on the pinion is preceded by a plus sign, the thickness of the ring is obtained by subtracting the number from the value shown on the gauge.
- If, however, the number marked on the pinion is preceded by a minus sign, the thickness of the ring is obtained by adding this number to the value shown on the dial gauge.

For example:

If $a = 2.90$ (value read off dial gauge)
and if $b = -5$ (centesimal value written on pinion)
then $S = a - (-b)$
$S = 2.90 - (-0.05)$
$S = 2.90 + 0.05$
$S = 2.95$

In this case a shim of 2.95 mm should be fitted

If the value obtained in this way does not correspond to the thickness of the shims available, the next biggest size shim should be fitted.

27.

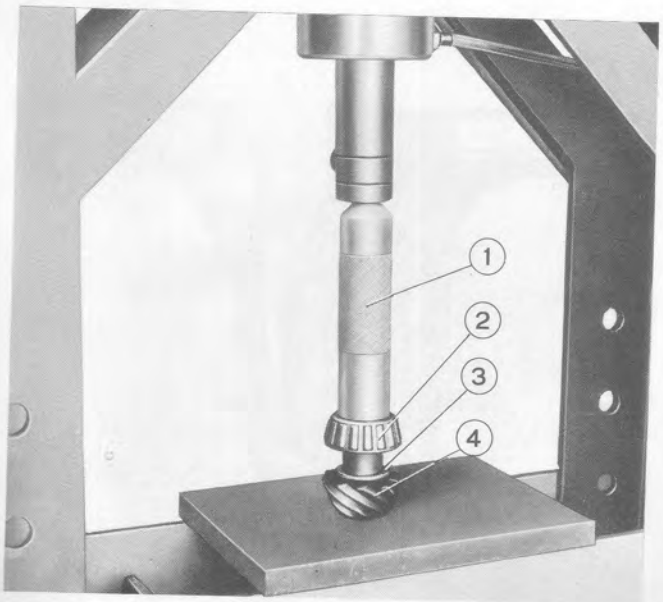

FITTING

Fitting rear roller bearing inner track on the bevel pinion, on the press.

1. Drift A.70152.
2. Rear roller bearing inner track.
3. Support ring.
4. Bevel pinion.

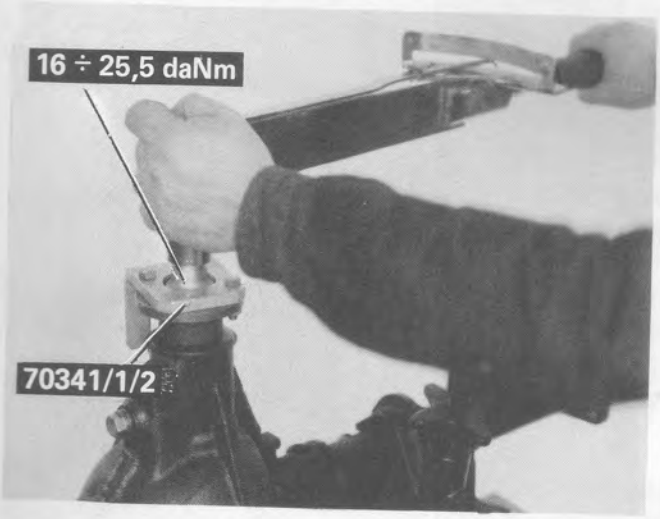

Tightening nut fixing sleeve to bevel pinion.

The ring nut should be tightened to a torque of 16 – 25.5 daNm to produce a rolling torque of 0.08 – 0.12 daNm on the pinion.
Bear in mind that when fitting on this type of differential which has a rubber spacer, the nut fixing the bevel pinion must never be loosened or the rubber spacer has to be replaced.
If, by chance, during the pre-loading operation the maximum rolling torque for the bevel pinion is exceeded, the fitting operation and the relevant checks must be repeated suing a new rubber spacer.

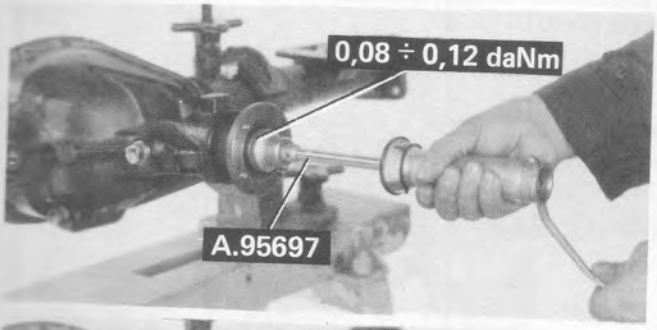

Checking bevel pinion rolling torque (bevel pinion roller bearing pre-loading)

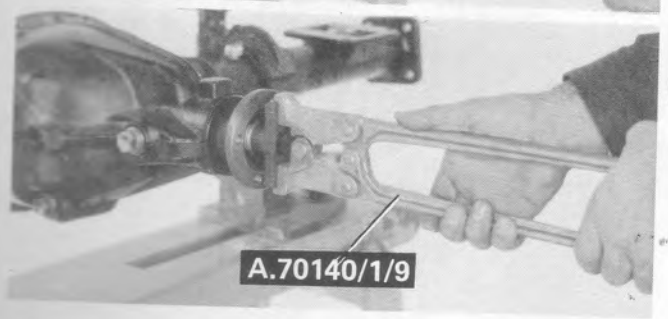

Staking nut fixing sleeve on bevel pinion

ADJUSTING

Position the differential unit complete with bearings on its supports and a shim.

- Fit tool **A.95753** with the lugs inserted in the appropriate housings in the support, taking care to see that the tension lever is open.
- Fix tool **A.95753** using the differential cover bolts.
- Tighten the side rods to a torque below 0.98 daNm.
- Tighten the tension lever using the right screw fitted with a knurled handle.
- Zero the dial gauge.
- Spread the differential support **0.6 – 0.8 mm** by turning the hexagonal sleeve in the direction shown by the arrow.
- Return the hexagonal sleeve to its original position so as to remove the force applied.
- Check that the fixing bolts and side rods are well tightened.
- Re-zero the dial gauge.

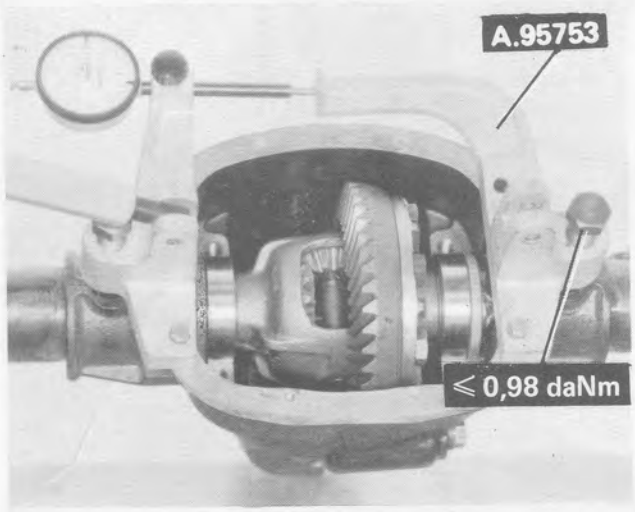

Fitting bearing pre-loading shim

- Spread the differential support **0.6 – 0.8 mm** turning the hexagonal sleeve in the direction shown by the arrow. This allows the second adjustment shim to be fitted.
- Fit the support caps, fully tightening the bolts.

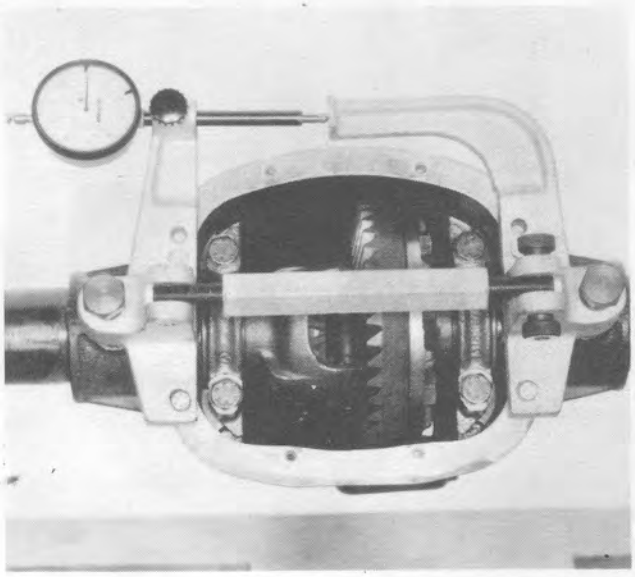

- The thickness of the shims must be such that, returning the hexagonal sleeve to the rest position, the pre-loading on the bearings is **0.04 – 0.05 mm**; this value should be read off the dial gauge.

27.

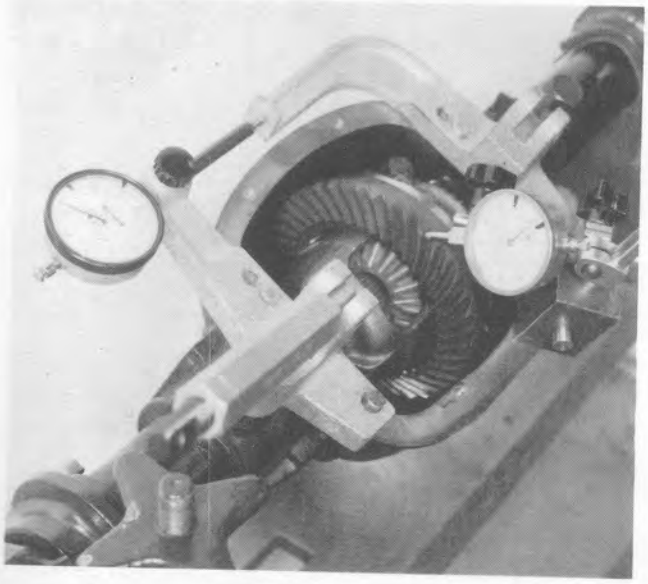

Checking crown wheel and pinion clearance

Using the magnetic base dial gauge, measure the clearance between the crown wheel and pinion which should be between **0.08** and **0.15 mm**. It can be obtained by suitably positioning the shims on either side, whilst leaving the pre-loading unchanged.
The shims are selected from those available as spares which come in sizes from 6.50 – 7.50 mm in 0.02 mm grades.

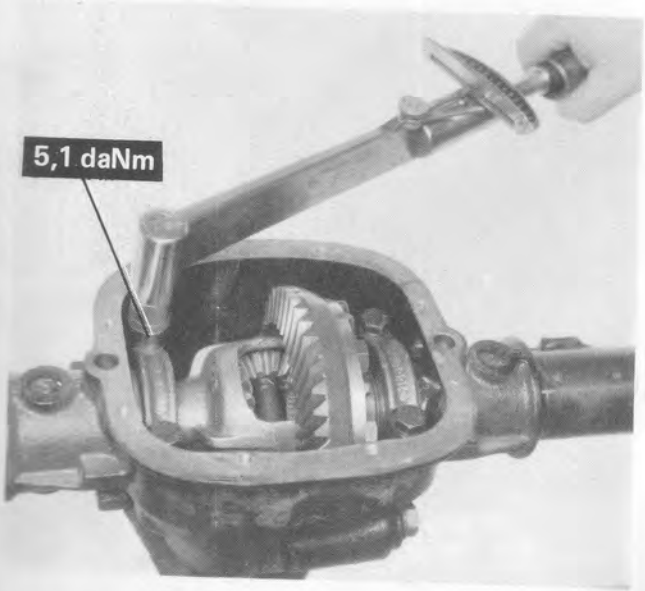

Tightening bolts fixing caps to diff carrier support using torque wrench

After determining the exact value of the shims and after fitting them, tighten the bolts fixing the caps to the support to a torque of 5.1 daNm.

Applying silicone sealant

Carefully clean the surfaces of the cover and the differential casing.
Apply the sealant as shown and fit the cover, tightening the bolts to a torque of 0.98 daNm.
It is advisable to wait:

- 1/2 to 1 hour before adding the oil to the differential casing
- 3 to 4 hours before using the vehicle.

Recommended products:

- EMAX 160 White
- SILASTIC S.P.3.

cylinder Ø
19.05 mm (3/4")

Removing-refitting rear brake shoe upper and lower return springs

The upper spring is shorter than the lower one.

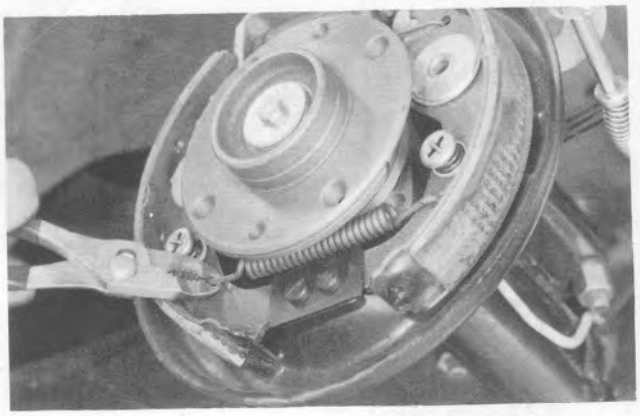

PERIODIC REPLACEMENT OF BRAKE FLUID

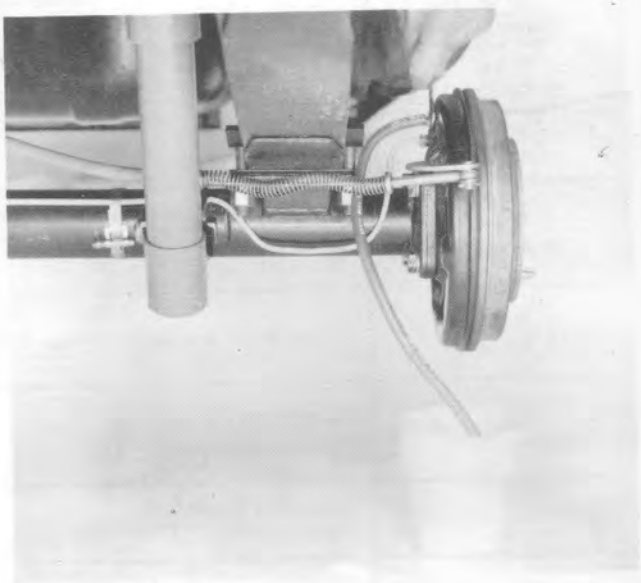

It is a good idea to change the brake fluid every 40,000 km (25,000 miles) (or every 2 years). Proceed as follows:

- Drain all the brake fluid in the circuit via the bleed screws on each wheel.
- When this has been done, fill the brake fluid resevoir with new brake fluid and wait until it comes out of the bleed screws on each wheel, then top up the level in the resevoir.
- Tighten the bleed screws and bleed the circuit until all the air is expelled, working on all four wheels, one at a time.
- Top up the brake fluid resevoir to the maximum recommended level and check that the braking system is operating efficiently.

NOTE *Only use FIAT TUTELA DOT 3 brake fluid.*

55.

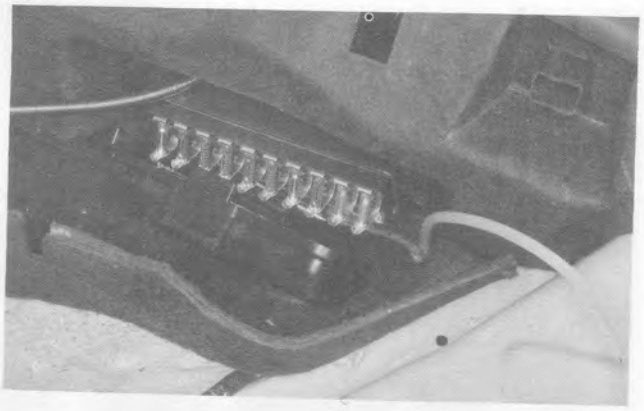

Fuse box located in dashboard (under spare wheel)

FUSES	PROTECTED CIRCUITS	
A (8 Ampere)	Reversing light Brake lights Heater motor	Direction indicators and relative warning light
B (•) (8 Ampere)	Insufficient brake fluid warning light Insufficient engine oil pressure warning light Fuel gauge and reserve warning light Windscreen wiper motor Heated rear windscreen relay	Rearscreen wiper motor Windscreen washer pump Rearscreen washer pump Coolant liquid overheating warning light Coolant liquid temperature gauge Wiring for clock (+ C) Rear drive engaged warning light
C (•) (8 Ampere)	Left headlamp, main beam	Main beam headlamp warning light
D (•) (8 Ampere)	Right headlamp, main beam	
E (•) (8 Ampere)	Left headlamp, dipped	
F (•) (8 Ampere)	Right headlamp, dipped	Rear fog light and indicator
G (•) (8 Ampere)	Instrument panel light and side lights indicator No. plate light	Left front and rear right side light Wiring for clock (1)
H (•) (8 Ampere)	Right front and left rear side lights	Cigarette lighter housing light (Panda 45 S)
I (10 Ampere)	Horn Courtesy lights	Car interior fan
L (8 Ampere)	Cigarette lighter Radio fitting (*) Hazard warning lights Wiring for clock (+ B)	
Not protected	Ignition Recharging circuit	Starting Recharging warning light
Free fuse located on relay on right side or brake pedal mounting (16 A)		Heated rear windscreen

(*) Optional (•) Controlled by ignition key

55.

1) Starting - Ignition - Recharging - Coolant liquid temperature - Horn - Insufficient engine oil pressure - Windscreen wash/wipe (see key on page 97).

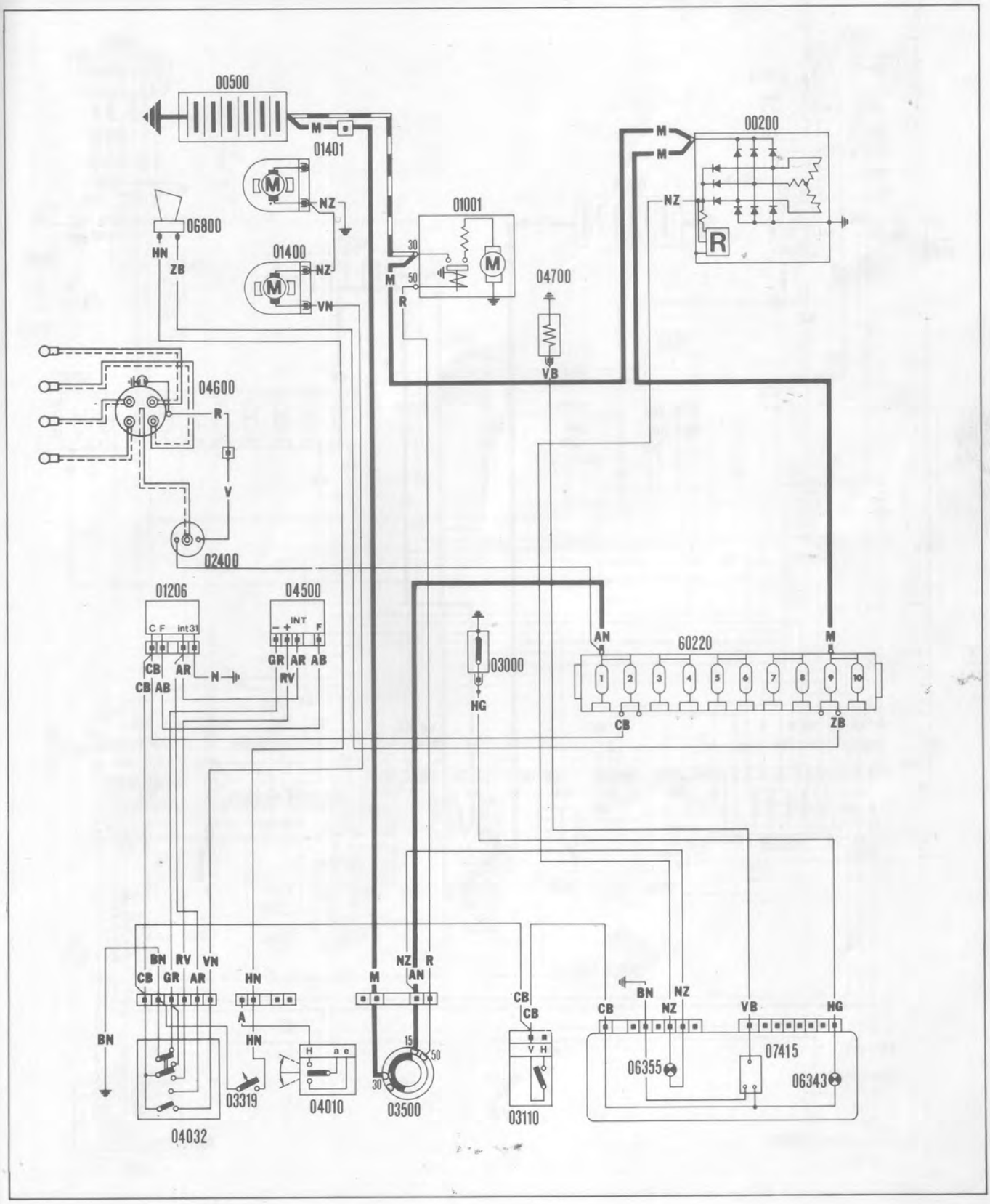

55.

2) Direction indicators - Hazard warning lights - Brake lights - Rear drive engaged warning light (see key on page 97).

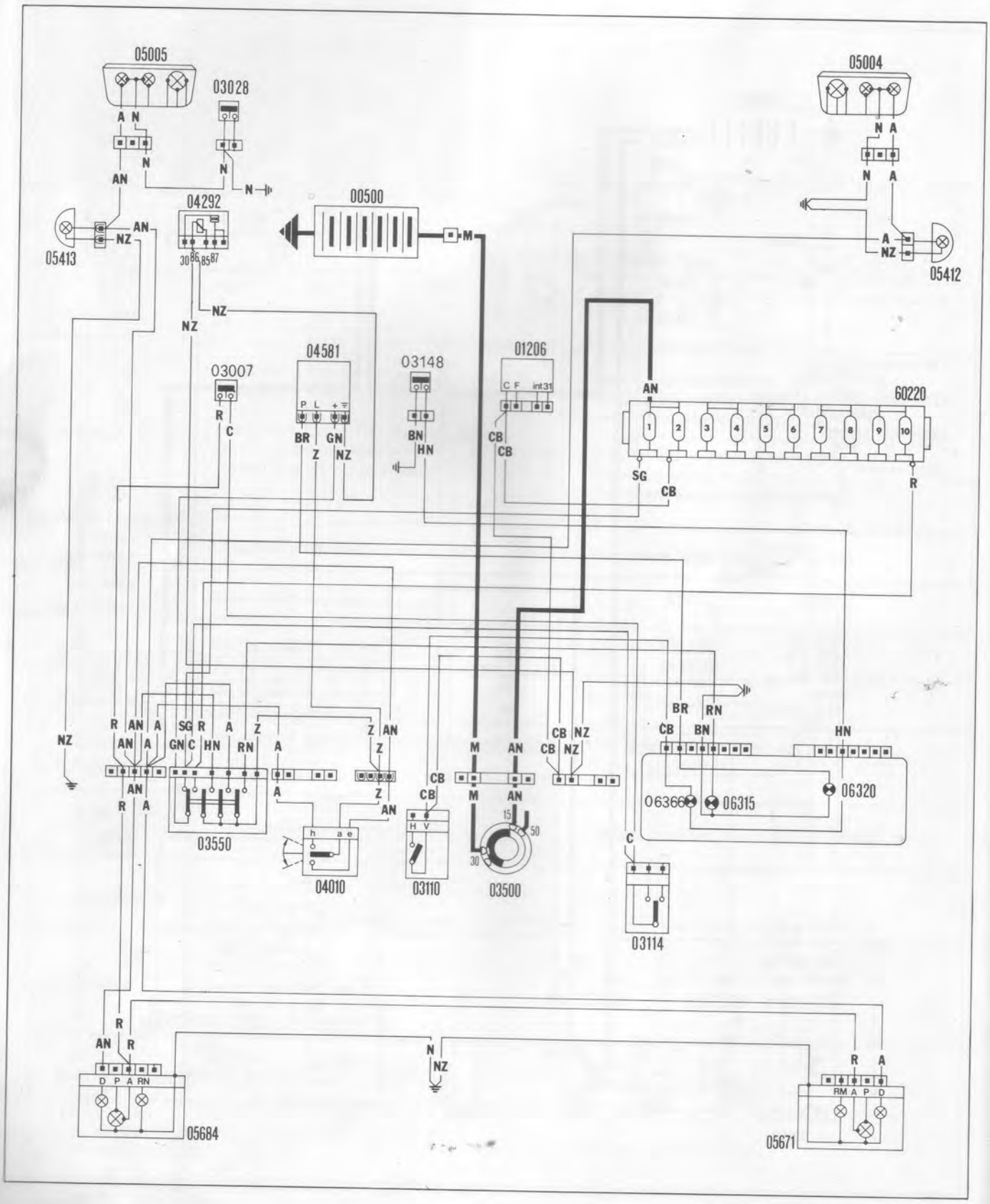

3) Side lights - Headlamps, dipped and main beam - No. plate light - Rear fog light - Reversing light - Insufficient brake fluid and handbrake warning light (see key on page 97).

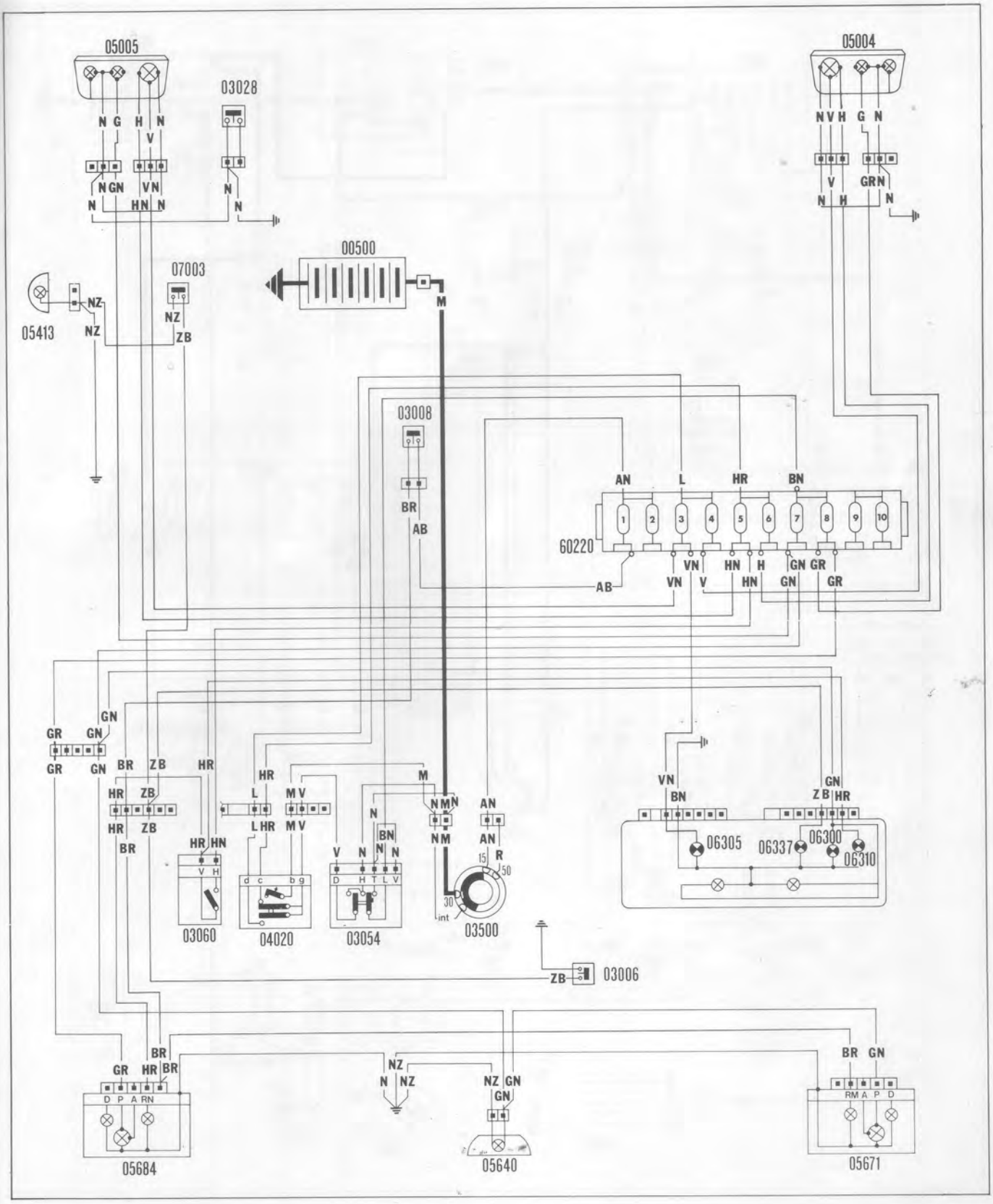

55.

4) Heated rear windscreen - Rearscreen wash/wipe - Fuel gauge and reserve - Courtesy lights (see key on page 97).

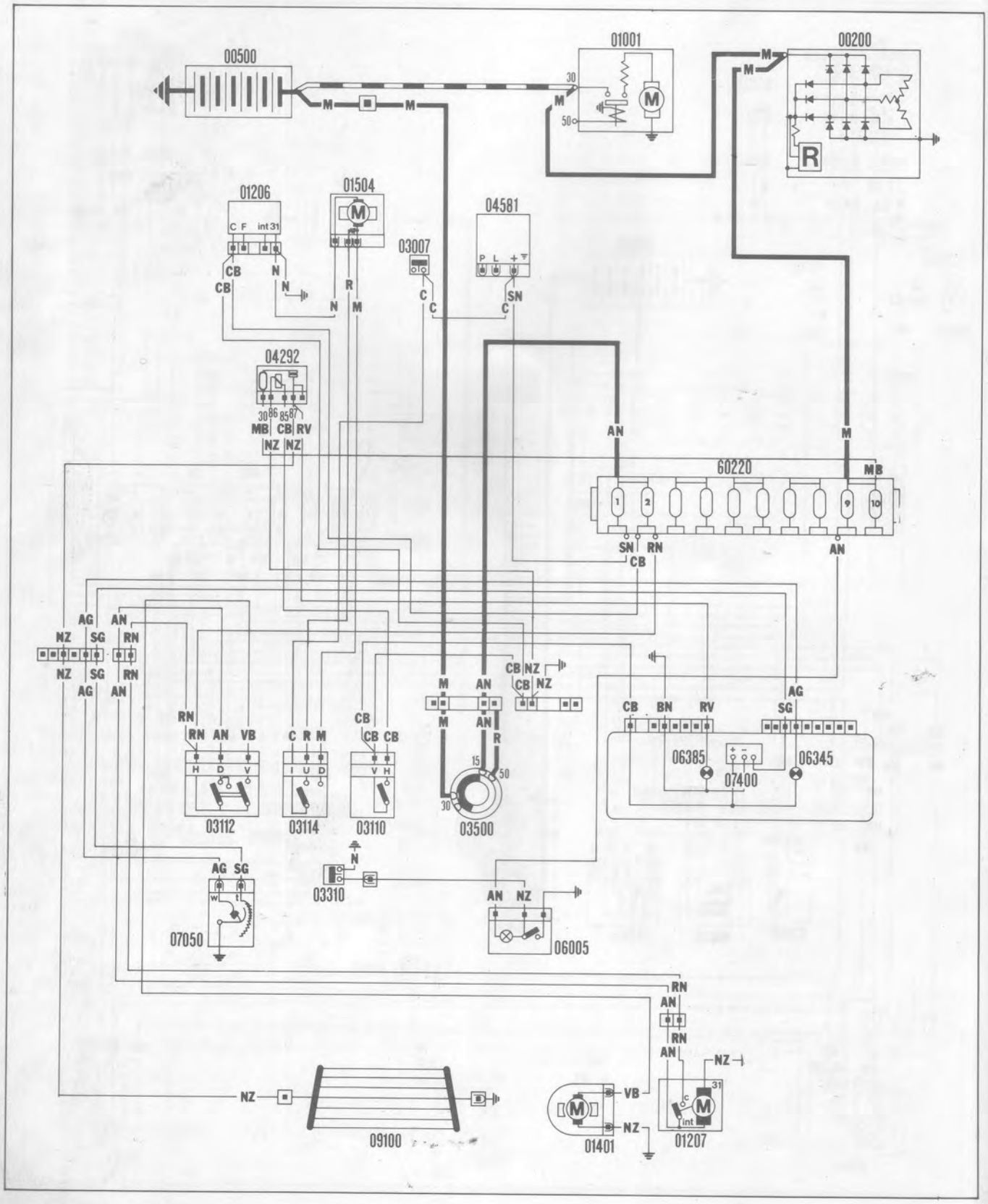

5) Radiator fan - Cigarette lighter - Radio fitting - Digital clock wiring.

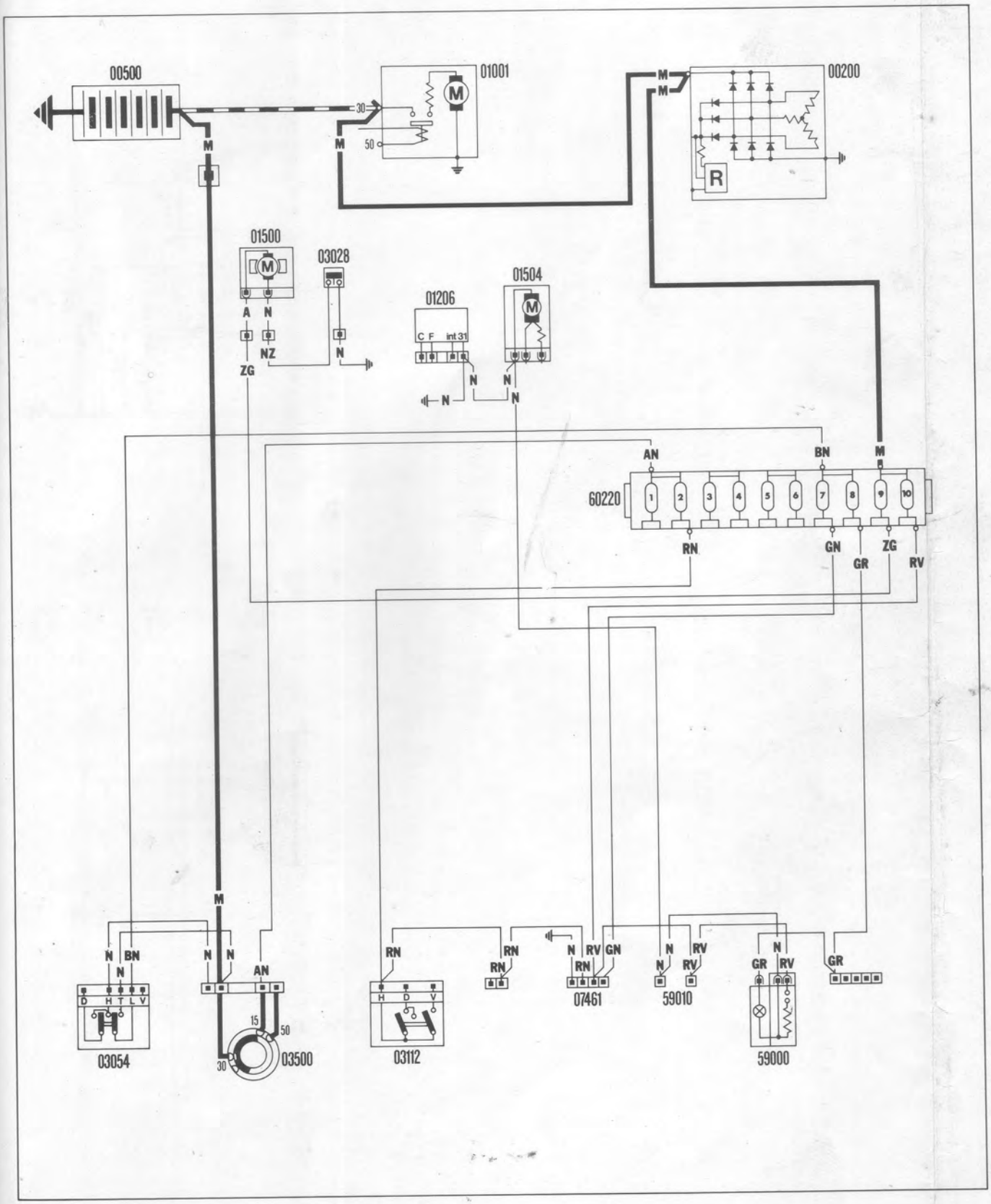

Wiring diagram key

00200 Alternator with built in voltage regulator

00500 Battery

01001 Starter motor

01206 Windscreen wiper motor

01207 Rearscreen wiper motor

01400 Windscreen washer pump

01401 Rearscreen washer pump

01500 Radiator cooling fan

01504 Heater fan

02400 Ignition coil

02475 Contact breaker with advance device

03000 Insufficient engine oil pressure switch

03006 Handbrake warning light switch

03007 Brake lights switch

03008 Reversing light switch

03028 Radiator thermal switch

03029 Coolant liquid overheating warning light switch

03054 Outside lights switch

03060 Rear fog light switch

03110 Heated rear windscreen switch

03112 Rearscreen washer switch

03114 Heater fan switch

03148 Rear wheel drive engaged switch

03310 Push button on left door for rear view mirror courtesy light

03319 Horn push button

03500 Ignition switch

03550 Hazard warning lights switch

04010 Steering column switch unit, direction indicators

04020 Steering column switch unit, headlamps, dipped and main beam

04031 Steering column switch unit, windscreen wiper

04032 Steering column switch unit, windscreen wash/wipe

04292 Heated rear windscreen relay

04500 Windscreen wiper intermittent device

04581 Direction indicators flasher unit

04600 Ignition distributor

04700 Water temperature sender unit

05004 Right front light cluster with headlamp, main beam and dipped, side light and direction indicator

05005 Left front light cluster with headlamp, main beam and dipped, side light and direction indicator

05412 Right front side direction indicator

05413 Left front side direction indicator

05640 No. plate light

05671 Right rear light cluster with side light, direction indicator brake light and reversing light

05684 Left rear light cluster with side light, direction indicator brake light and rear fog light

06005 Courtesy light on rear view mirror with switch

06300 Side lights warning light

06305	Main beam headlamps warning light
06310	Rear fog light warning light
06315	Hazard warning lights warning light
06320	Direction indicators warning light
06336	Handbrake warning light
06337	Brake fault and handbrake warning light
06343	Insufficient engine oil pressure warning light
06345	Fuel reserve warning light
06350	Coolant liquid overheating warning light
06355	Battery recharging warning light
06366	Rear wheel drive engaged warning light
06385	Heated rear windscreen warning light
06800	Horn
07003	Brake fluid level sensor
07050	Fuel gauge
07400	Fuel gauge
07415	Coolant liquid temperature gauge
07461	Digital clock (if fitted)
09100	Heated rear windscreen
59000	Cigarette lighter
59010	Radio power lead (if fitted)
60220	10 place fuse box

Cable colour code

A	Light blue
B	White
C	Orange
G	Yellow
H	Grey
L	Blue
M	Brown
N	Black
R	Red
S	Pink
V	Green
Z	Violet
AB	Light blue - White
AG	Light blue - Yellow
AN	Light blue - Black
AR	Light blue - Red
AV	Light blue - Green
BG	White - Yellow
BL	White - Blue
BN	White - Black
BR	White - Red
BV	White - Green
BZ	White - Violet
CA	Orange - Light blue
CB	Orange - White
CN	Orange - Black
GN	Yellow - Black
GL	Yellow - Blue
GR	Yellow - Red
GV	Yellow - Green
HG	Grey - Yellow
HN	Grey - Black
HR	Grey - Red
LB	Blue - White
LG	Blue - Yellow
LN	Blue - Black
LR	Blue - Red
LV	Blue - Green
MB	Brown - White
NZ	Black - Violet
RB	Red - White
RG	Red - Yellow
RN	Red - Black
RV	Red - Green
SN	Pink - Black
VB	Green - White
VN	Green - Black
VR	Green - Red

DIAGRAM FOR CHECKING ATTACHMENT POINTS OF MECHANICAL COMPONENTS TO BODYSHELL

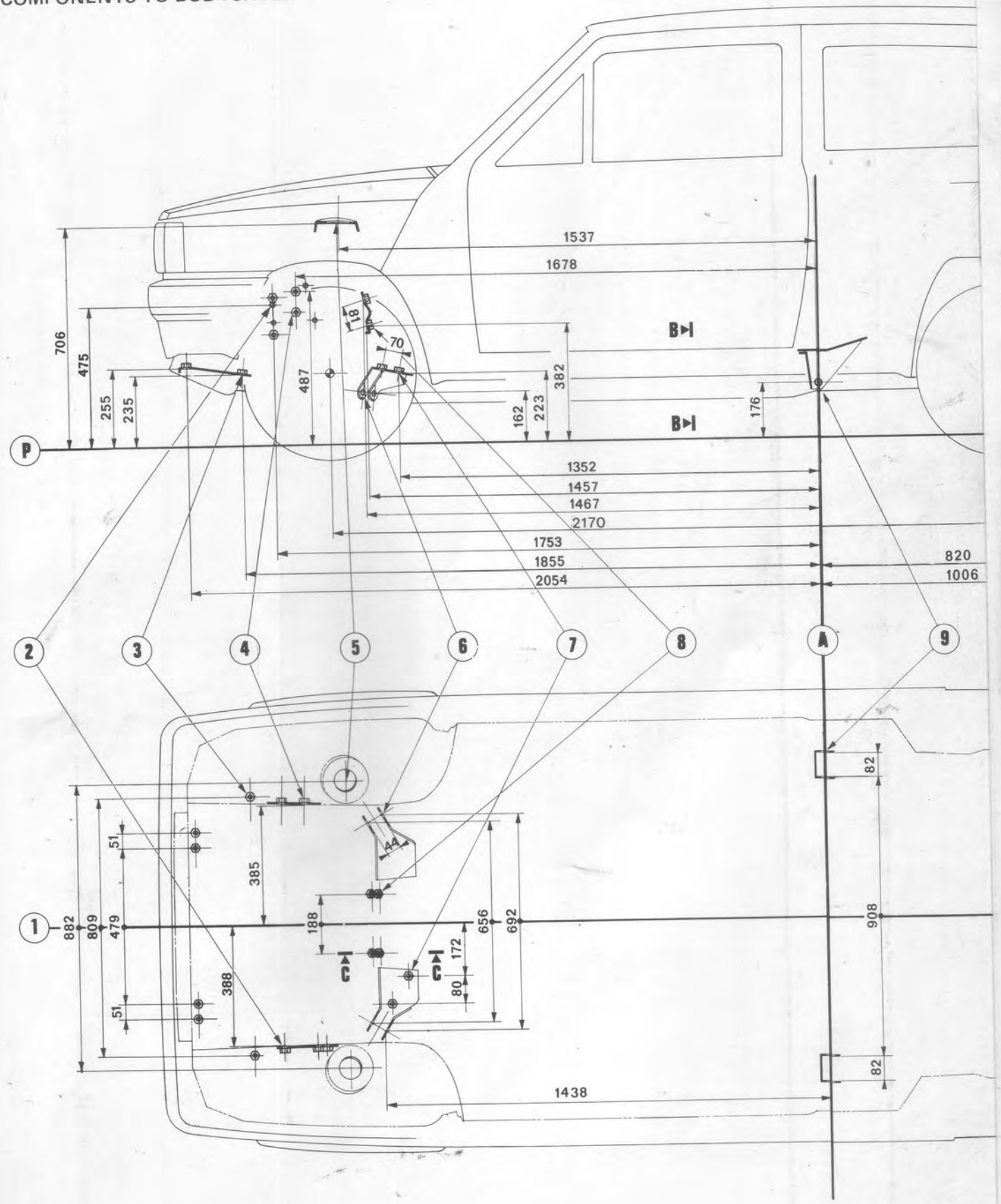

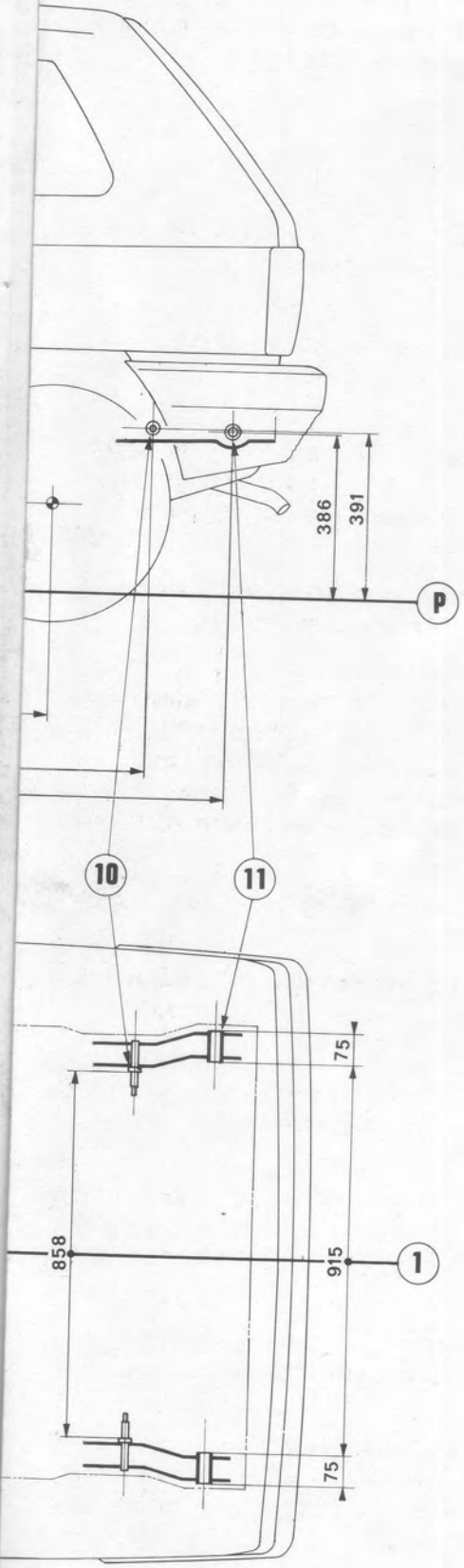

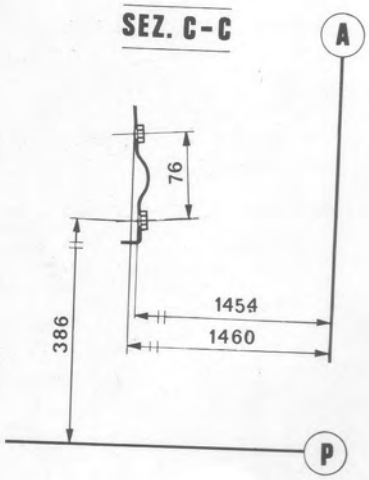

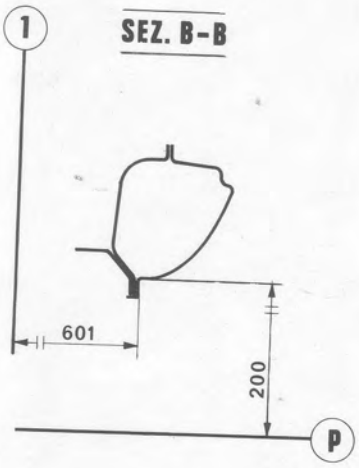

Key

A. Transverse reference axis
P. Reference plane
1. Car centre line
2. Power unit mounting, left side (nuts M 8 x 1.25)
3. Front suspension strut mounting (nuts M 10 x 1.25)
4. Power unit mounting, right side (nuts M 8 x 1.25)
5. Front shock absorber upper mounting (opening Ø 48)
6. Front suspension arm mounting (openings Ø 10.5)
7. Power unit mounting, rear (nuts M 8 x 1.25)
8. Steering box mounting (nuts M 8 x 1.25)
9. Rear suspension leaf spring front mounting (opening Ø 26)
10. Rear shock absorber upper mounting (pin Ø 16)
11. Rear suspension leaf spring rear mounting (opening Ø 12.5)

CLUTCH

A.70418	Guide pin for centering clutch disc

GEARBOX

A.50113	Spanner for gearbox - differential oil drain plug
A.55035	Spanner for removing-refitting gearbox
A.55087	Spanner for gearbox oil level plug
A.70007	Grip for fitting tools
A.70100/2/3	Tool for fitting 5th speed synchronizer
A.70225/2/3	Tool for fitting synchronizer rings
A.70375	Tool for fitting seal on drive shaft protective boot
A.70558	Support for gearbox - differential unit during removing-refitting (to be used with hydraulic jack)
A.70595	Support for engine in vehicle when removing gearbox - differential unit
A.71001/14	Support for gearbox - differential unit whilst overhauling
A.74140/1/5	Pliers for staking nuts fixing 5th speed gears on main and output shafts
A.75069	Tool for fitting gearbox rod bushes
A.81115	Tool for removing-refitting 3rd, 4th and 5th speed synchronizer circlip
A.81118	Tool for fitting drive shaft boot clips
A.81124	Pliers for removing-refitting drive shaft ring
A.86014	Drift for fitting front gearbox cover plugs Ø 14 mm
A.86016	Drift for fitting front gearbox cover plugs Ø 16 mm

FRONT DIFFERENTIAL

A.40005/003	Tool for removing differential casing bearing inner tracks
A.45008	Tool for removing bevel pinion front bearing ring
A.50179	Spanner for nuts fixing reduction gear housing (complete with bevel pinion and rear power take off)
A.55165 (*)	Spanner for ring nut fixing rear power output shaft
A.55166 (*)	Spanner for ring nut fixing bevel pinion and toothed hub (to be used with A.70425) and for checking bevel pinion rolling torque (to be used with A.95697)
A.70007	Grip for fitting tools
A.70152	Drift for fitting bevel pinion front and rear bearings inner tracks
A.70294	Drift for fitting differential casing bearing inner track
A.70424 (*)	Tool for front and rear bearing outer tracks for bevel pinion in support (to be used with A.70007)
A.70425 (*)	Tool for retaining pinion whilst adjusting ring nut
A.70426 (*)	Tool for fitting rear power output shaft seal in support (to be used with A.70007) and for fitting bearing

(*) New tools

A.70427 (*)	Dummy pinion for determining thickness of bevel pinion adjustment shim (to be used with A.95113)
A.75019	Extractor for differential casing bevel pinion side bearing inner track (to be used with A.40005/003)
A.81102	Tool for removing-refitting bearing circlip for rear power output shaft
A.95655	Tool for determining thickness of adjustment shim for differential bearing pre-loading (to be used with dial gauge A.95885 or A.95881)
A.95889 (*)	Extension to be used with dial gauge A.95884 for checking crown wheel - pinion clearance (to be used with magnetic base dial gauge A.95684)

PROPELLER SHAFT

A.70423 (*)	Drift for removing-refitting selector fork sleeve spider

AXLE–REAR DIFFERENTIAL

A.40206	Extractor for removing drive shaft oil seal on axle casing (to be used with A.40005/109)
A.45008	Tool for removing rear bearing ring from bevel pinion
A.45028	Extractor for differential internal casing bearing inner tracks (to be used with A.40005/001/302)
A.70152	Tool for fitting front and rear bearing inner tracks on bevel pinion. Tool for fitting bearing inner tracks on differential casing
A.70341/1/2 (*)	Tool for retaining bevel pinion whilst adjusting fixing nut
A.70424 (*)	Tool for fitting bevel pinion front and rear bearing outer tracks in differential support (to be used with A.70007)
A.70426 (*)	Tool for fitting drive shaft oil seal on axle casing (to be used with A.70007)
A.70428 (*)	Dummy pinion for determining thickness of bevel pinion adjustment shim (to be used with A.95690 and dial gauge A.95884)
A.70572	Support for rear axle whilst removing and refitting
A.74140/1/9	Pliers for staking nut fixing bevel pinion
A.95753	Tool for determining thickness of adjustment shims for differential casing bearing pre-loading (to be used with dial gauge A.95882) Tool for checking and adjusting clearance between crown wheel and pinion (to be used with dial gauge A.95881)

(*) New tools

Tightening torques

DESCRIPTION	Thread size	Torque daNm
ENGINE		
Bolt fixing crankshaft caps to crankcase	M 10 x 1,25	7
Bolt fixing sump to crankcase	M 6	0,8
Nut fixing sump to timing cover and to crankshaft oil seal cover (flywheel side)	M 6	0,8
Bolt fixing cylinder head to crankcase	M 9	5,9
Bolt fixing support for power unit mounting to crankcase	M 8	2,5
Nut fixing rubber mounting to support	M 8	2,5
Nut fixing exhaust pipe to cylinder head	M 8	2
Nut fixing big end cap	M 8 x 1	4,1
Bolt fixing flywheel to crankshaft (*)	M 8	4,5
Bolt fixing driven gear and fuel pump cam to camshaft	M 10 x 1,25	5
Nut for stud fixing rocker arm support to cylinder head	M 10 x 1,25	4
Nut fixing drive pulley	M 18 x 1,5	10
Nut for stud fixing alternator to crankcase	M 10 x 1,25	5
Water temperature sender unit	M 16 x 1,5 Tapered	5
Oil pressure switch	12 x 1,5	2,5
Spark plugs	14 x 1,25	3,5

(*) Cover the thread with synthetic enamel before tightening.

DESCRIPTION	Thread size	Torque daNm
Nut for bolt fixing front exhaust pipe to manifold	M 8	2
Nut for bolt fixing front exhaust pipe bracket to silencer complete with pipes	M 8	2,5
Nut for bolt fixing front exhaust pipe bracket	M 8	1,5
Bolt fixing lower exhaust pipe mounting	M 8	2,5

POWER UNIT MOUNTING

Bolt fixing complete mounting to power unit, engine side	M 8	2,5
Bolt fixing rubber mounting to power unit mounting, engine side	M 12 x 1,25	9
Bolt fixing complete mounting to power unit, gearbox side	M 8	2,5
Bolt fixing rubber mounting to power unit mounting, gearbox side	M 12 x 1,25	9
Bolt fixing mounting plate to gearbox	M 10 x 1,25	3
Bolt fixing mounting plate to gearbox	M 8	2,5
Nut fixing bracket to gearbox, differential side	M 10 x 1,25	5
Bolt fixing rubber mounting, differential side	M 8	2,5
Nut fixing rubber mounting to bracket differential side	M 12 x 1,25	9
Nut fixing power unit mounting rubber mounting, gearbox side to bodywork	M 8	2,5
Bolt fixing bracket to gearbox, differential side	M 8	2,5

DESCRIPTION	Thread size	Torque daNm

CLUTCH

Bolt fixing clutch plate to flywheel	M 6	1,6
Bolt fixing clutch release fork	M 8	2,6

GEARBOX – FRONT DIFFERENTIAL

Bolt fixing gear control rods selector spring cover	M 8	2,5
Spacer on power unit mounting bracket support	M 14 x 1,5	14,5
Bolt fixing cover to gearbox casing	M 8	2,5
Nut and bolts fixing gearbox casing mounting to engine	M 8	2,5
Bolt fixing gear selector fork	M 6	2
Nut fixing gear control shaft	M 8	1,5
Nut fixing upper relay lever	M 10 x 1,25	3,1
Nut fixing outer gear selector lever	M 8	1,5
Bolt fixing reduction gear crown wheel	M 10 x 1,25	10
Bolt fixing differential case retaining flange to gearbox casing	M 8	2,5
Ring nut fixing 5th speed gears to main and output shafts	M 20 x 1,5	12
Bolt fixing plate and cover to gearbox casing	M 8	2,5
Nut for stud fixing rear power take off reduction gear support	M 10 x 1,25	5

DESCRIPTION	Thread size	Torque daNm
Bolt fixing cover to reduction gear power take off	M 8	3
Ring nut fixing power output shaft	M 35 x 1,5	20
Ring nut fixing bevel pinion to reduction gear housing	M 26 x 1,5	23 ÷ 32
Plug for selector spring push rod cover	M 12 x 1,25	4
Reduction gear power take off cover drain plug	M 12 x 1,5	3
Bolt fixing rear wheel drive engagement fork	M 6 x 1	1

PROPELLER SHAFT

Bolt fixing propeller shaft, gearbox side	M 8 x 47	4,5
Nut fixing propeller shaft, differential side	M 8	3,2
Nut fixing connecting sleeve to mounting	M 16 x 1,5	3
"Nyloc" nut for bolt fixing sleeve on bevel pinion to propeller shaft fork	M 8	3,5
Bolt fixing constant velocity joint to propeller shaft	M 8	4
Bolt fixing constant velocity joint, gearbox side	M 8	4,5

AXLE – REAR DIFFERENTIAL

Bolt fixing cover to diff carrier	M 6	0,8
Bolt fixing caps to diff carrier	M 10 x 1,25	5,1

DESCRIPTION	Thread size	Torque daNm
Bolt fixing crown wheel	M 10 x 1,25	10
Oil filler plug	M 22 x 1,5 (tapered)	4,6
Oil drain plug	M 22 x 1,5 (tapered)	4,6
Nut fixing sleeve on bevel pinion	M 20 x 1,5	16 ÷ 25,5

BRAKING SYSTEM

Bolt fixing handbrake lever to bodywork	M 10 x 1,25	4
Bolt fixing cylinder to disc	M 6	1
Nut for bolts fixing hydraulic brake pump	M 8	2,5
Pipe union Ø 4.76 mm	M 10 x 1,25	1,1

STEERING

Nut fixing steering wheel to steering shaft	M 16 x 1,5	5
Nut with polyamide ring for bolt fixing steering control shaft universal joint fork	M 8	3
Nut fixing ball joint to side steering rod	M 14 x 1	5
Nut with polyamide ring fixing ball joint to lever on shock absorber	M 10 x 1,25	3,5

DESCRIPTION	Thread size	Torque daNm
FRONT SUSPENSION		
Nut to be staked fixing front wheel bearing	M 20 x 1,5	22
Wheel bolts	M 12 x 1,25	9
Bolt fixing brake back plate hub with bearing to front wheel steering knuckle	M 10 x 1,25	6
Nut with polyamide ring fixing suspension arm to bodywork	M 10 x 1,25	4
Nut with polyamide ring fixing front suspension ball joint to suspension arm	M 10 x 1,25	3,5
Nut fixing upper shock absorber rubber mounting to bodywork	M 8	2,5
Nut with polyamide ring for bolt fixing shock absorber to steering knuckle	M 12 x 1,25	12,5
Nut with polyamide ring fixing upper shock absorber	M 10 x 1,25	2,5
Nut with polyamide ring for bolt fixing strut to mounting	M 12 x 1,25	7
Bolt fixing strut attachment bracket to front suspension arm	M 8	1,5
Bolt fixing strut support to bodywork	M 10 x 1,25	4
Bolt fixing front wheel brake caliper mounting	M 10 x 1,25	5,5
Nut with polyamide ring fixing steering control lever on front wheel shock absorber	M 8	2,5

DESCRIPTION	Thread size	Torque daNm

REAR SUSPENSION

Wheel bolts	M 12 x 1,25	9
Nut for bracket fixing leaf spring to rear axle	M 10 x 1,25	4
Nut fixing leaf spring silent block	M 10 x 1,25	3
Nut with polyamide ring fixing upper and lower shock absorber mountings	M 12 x 1,25	5
Bolt fixing bearing complete with hub to rear axle	M 10 x 1,25	7

Graphic representations and symbols

	Temperature < 0° C Cold Winter
	Temperature > 0° C Heat Summer
	Windscreen wiper and washer
	Rearscreen wiper and washer
	Rev counter No. of revs
	Compression ratio
	Grades Classes
> Oversize Greater than Maximum	< Undersize Smaller than Minimum
	Machined finished surface
	Clearance Distance to be measured Thickness Check
	Interference fit
	Tolerance or difference in weight
	Inlet
	Exhaust
	Operation
	Tighten to torque plus angle
	Temperature
stop	Close Stop Off
bar	Pressure
	Tyre pressure
	Engagement and disengagement mechanism
	Ratio
	Adjustment Regulation
	Angle Angle value
	Pre-load
	Rolling torque
	Rotation
	Wheel geometry
	Remove Disconnect
	Refit Connect
	Remove Disassemble
	Fitting Assembly
	Tighten fully

Graphic representations and symbols

	Tighten to torque figure
	Visual check inspection
	Warning
	Lubricate Moisten
	Replacement parts
	Bleeding braking system
	Parking lights and instrument panel light
	Brake ligths
	Reversing light
	Courtesy lights
	Headlamps, dipped
	Headlamps, main beam
	Direction indicators
	Rear fog lamp
	Quartz clock
	Digital clock
	Radio
	Horn
	Cigarette lighter
	Heated rear windscreen
	Automatic transmission
	Radiator fan
	Car interior fan
	Insufficient brake fluid
	Handbrake applied
	Fuel reserve
	Insufficient oil pressure
	Recharging
	Ignition
	Starting
	Hazard warning lights
	Stake nut
	Preheating
	Engine oil pressure